1170 RPM ENCLOSED TYPE IMPELLER 12FKH

NO. OF STAGES	EFF. CHANGE (NO. OF POINTS)
1	-4 1/2
2	-1
3	-0

HORSEPOWER WILL BE EFFECTED BY CHANGE IN EFFICIENCY

PERFORMANCE FOR:
Bowl Pattern No.: 546000-C-R4
Imp. Pattern No.: 546003-C-R0

PUMP DATA

Shaft Dia.(IN.)	1 11/16
Maximum Sphere (IN.)	1
Maximum Head (FT.)*	617
Min. Submergence (IN.)**	24
Impeller Wt. (LBS.)	22.9
Thrust Constant (K)	13.5
Bowl O.D. (IN.)	11 3/4

NOTES

Performance indicated based on cold water with a specific gravity of 1.0

* Standard construction.

** Minimum submergence over lip of bell to prevent vortexing.

Efficiency improvements are available in certain instances. Please contact the factory.

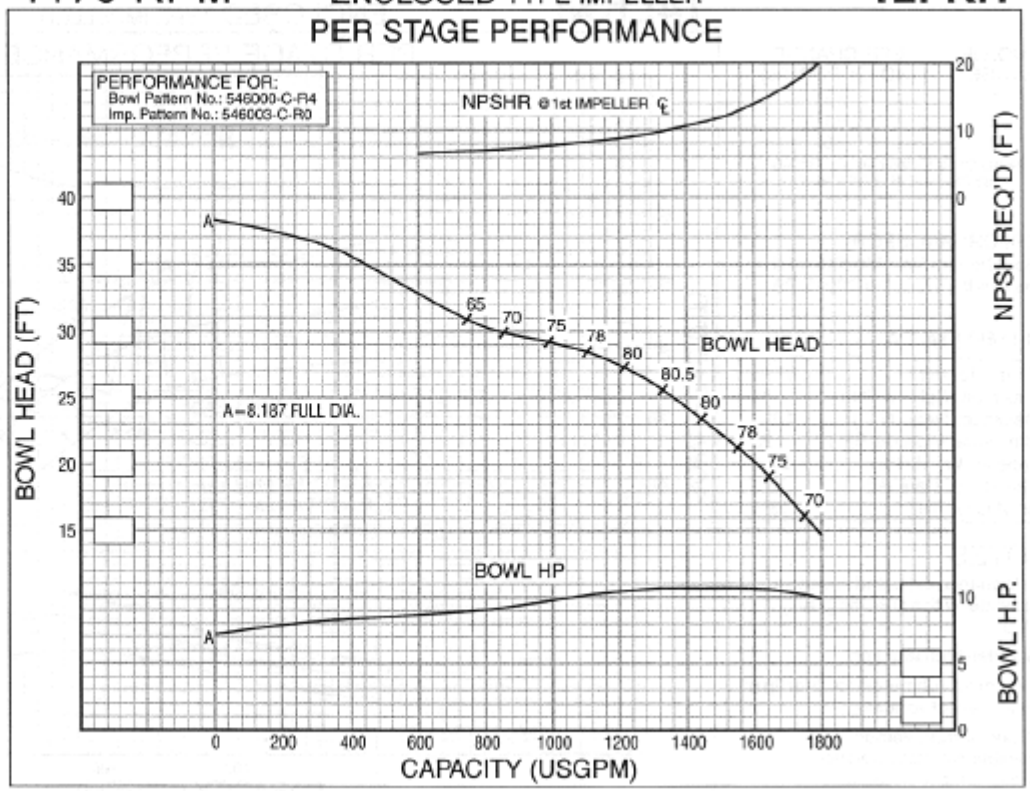

12FKH 1170 **RPM**

PER STAGE PERFORMANCE

ENCLOSED **TYPE IMPELLER**

FLOWAY®

NUMBER OF STAGES	EFFICIENCY CHANGE	NUMBER OF POINTS
1	LOWER	2 1/2
2	LOWER	1
3	LOWER	0

HORSEPOWER WILL BE AFFECTED BY CHANGE IN EFFICIENCY

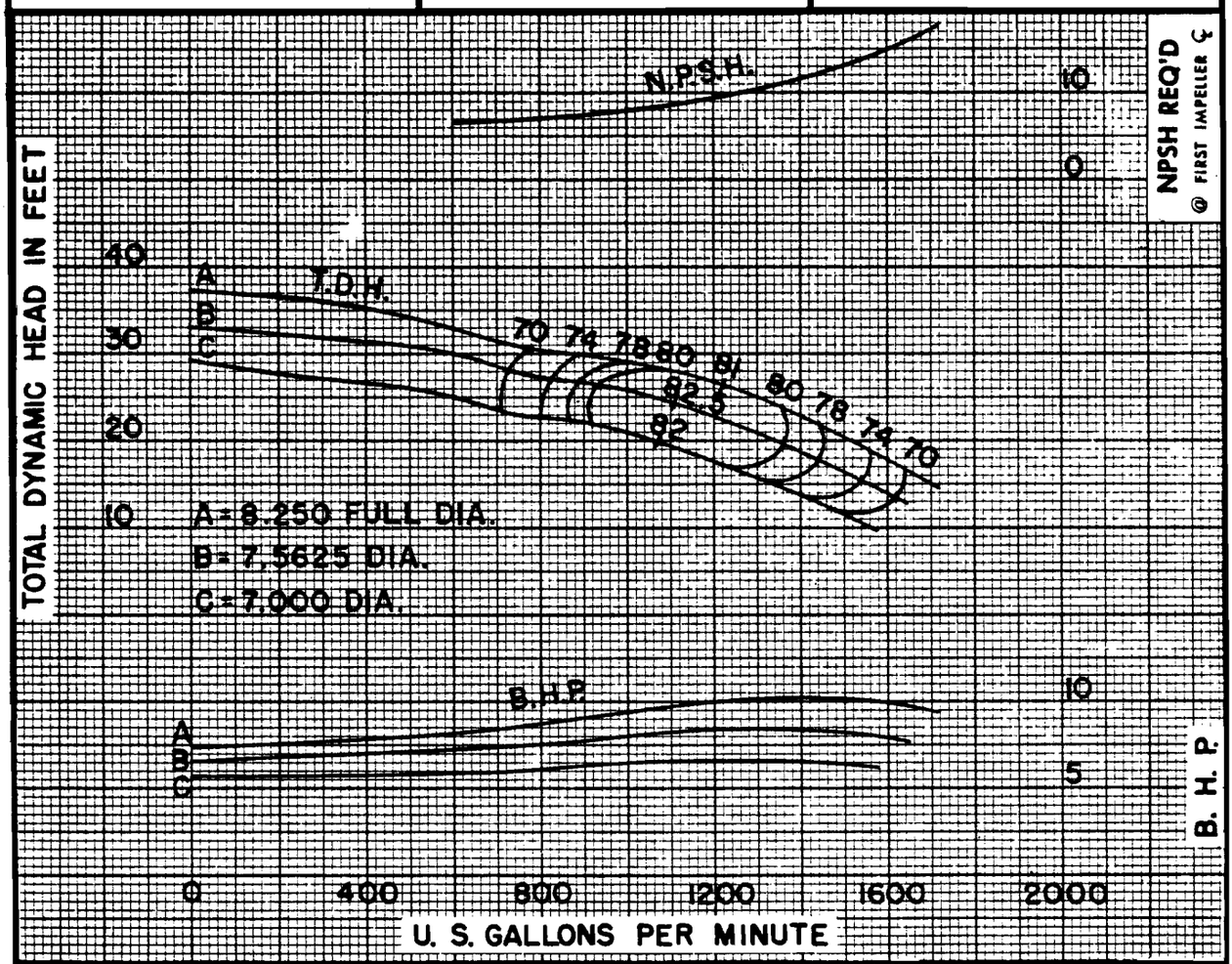

DIMENSIONS IN INCHES	A	B	C	E	F_1	F_2	G	H	K	L	N	P	S	T	W	X	Y	Z	ZZ
	7 3/4	10 5/16	9	11 3/4	12	16	3 3/4	27 1/8	27 1/8	8	8-10-12	10	3 3/4	13 1/16	9	11 1/4	13 1/8	13 7/8	10 3/4

PUMP DATA

Thrust Constant (K) 13.5 W.R.² 2.178 Lb. Ft.²
Shaft Dia. 1 11/16" Max. Sphere 1"
Eye Area 32.2 in² Max. Head (Std. Const.) 617'
Max. Number of Stages (Std. Const.) 15
Axial Clearance (Std.) 1/2" Axial Clearance (Max.) 1"

NOTES:

"K" is length of a one stage assembly — from lip of bell to column butt.
"H" is length of a one stage assembly — from end of suction pipe to column butt.
"Y" is strainer diameter.
"Z" is maximum diameter across strainer fasteners.
WR² is per stage for impeller, collet and one stage shaft length.
Maximum head indicated is based on cold water with 1.0 specific gravity.

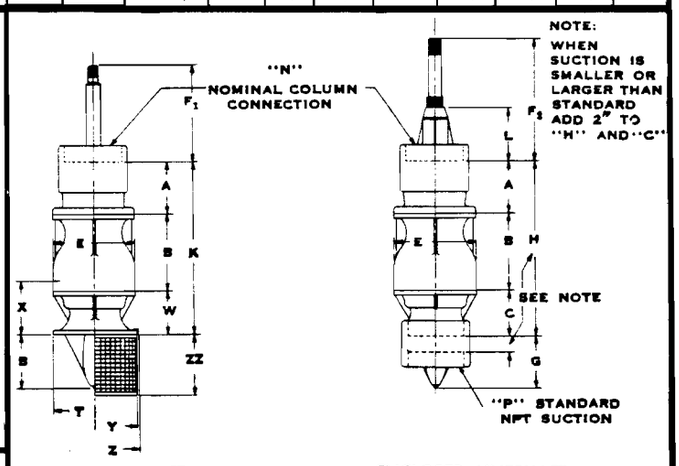

OPEN LINESHAFT W/SUCTION BELL

ENCLOSED LINESHAFT W/SUCTION CASE

FLOWAY PUMPS, INC.
FRESNO, CALIFORNIA

NOT FOR CERTIFICATION