1770 RPM ENCLOSED TYPE IMPELLER 12FKL

NO. OF STAGES	EFF. CHANGE (NO. OF POINTS)
1	-4 1/2
2	-1
3	-0

HORSEPOWER WILL BE EFFECTED BY CHANGE IN EFFICIENCY

PERFORMANCE FOR:
Bowl Pattern No.: 546000-C-R4
Imp. Pattern No.: 546001-B-R0

PUMP DATA

Shaft Dia.(IN.)	1 11/16
Maximum Sphere (IN.)	1
Maximum Head (FT.)*	617
Min. Submergence (IN.)**	24
Impeller Wt. (LBS.)	25.6
Thrust Constant (K)	13.5
Bowl O.D. (IN.)	11 3/4

NOTES

Performance indicated based on cold water with a specific gravity of 1.0

* Standard construction

** Minimum submergence over lip of bell to prevent vortexing.

Efficiency improvements are available in certain instances. Please contact the factory.

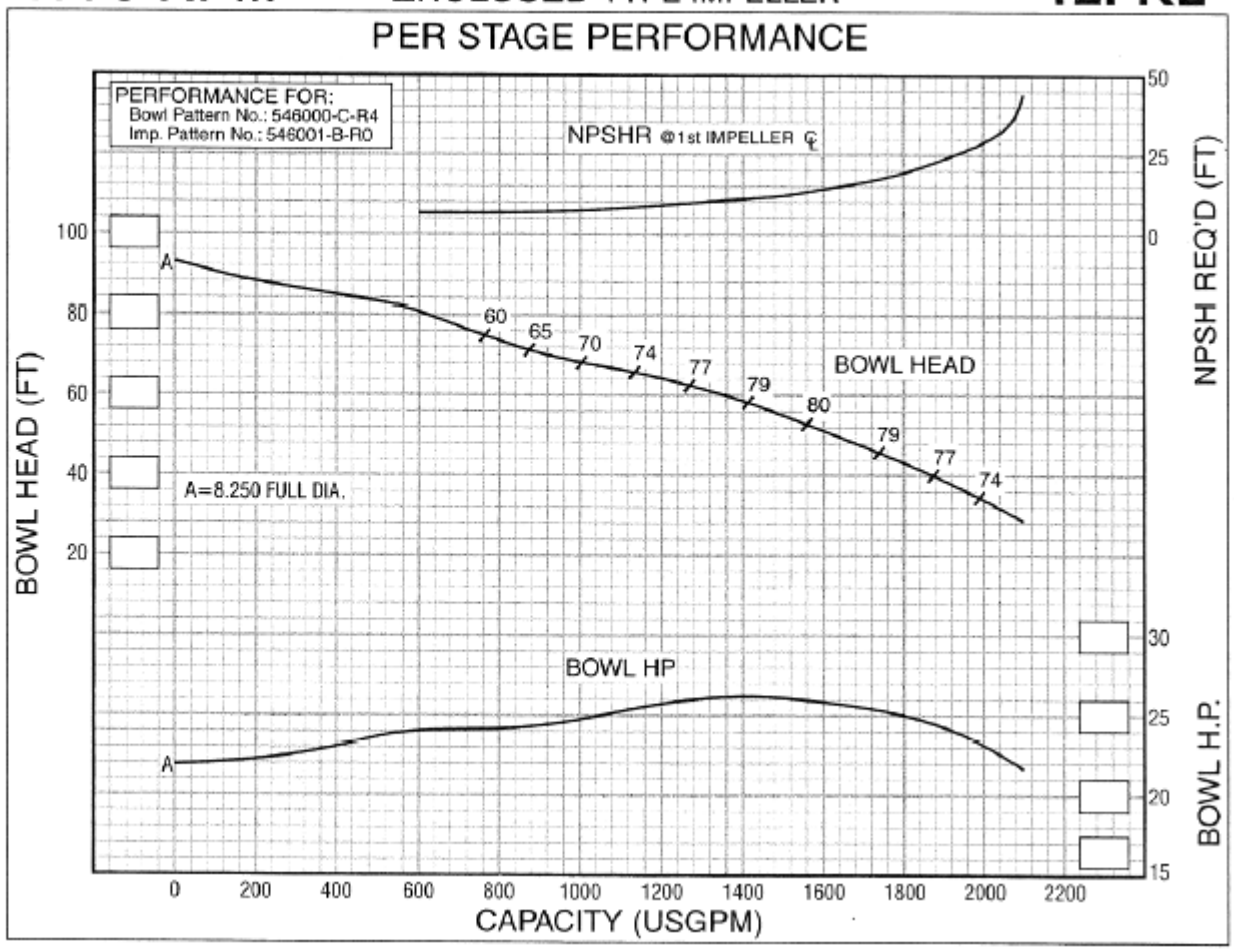

NUMBER OF STAGES	EFFICIENCY CHANGE	NUMBER OF POINTS
1	LOWER	2 1/2
2	LOWER	1
3	LOWER	0

HORSEPOWER WILL BE AFFECTED BY CHANGE IN EFFICIENCY

FLOWAY®

12FKL 1170 RPM

PER STAGE PERFORMANCE

ENCLOSED TYPE IMPELLER

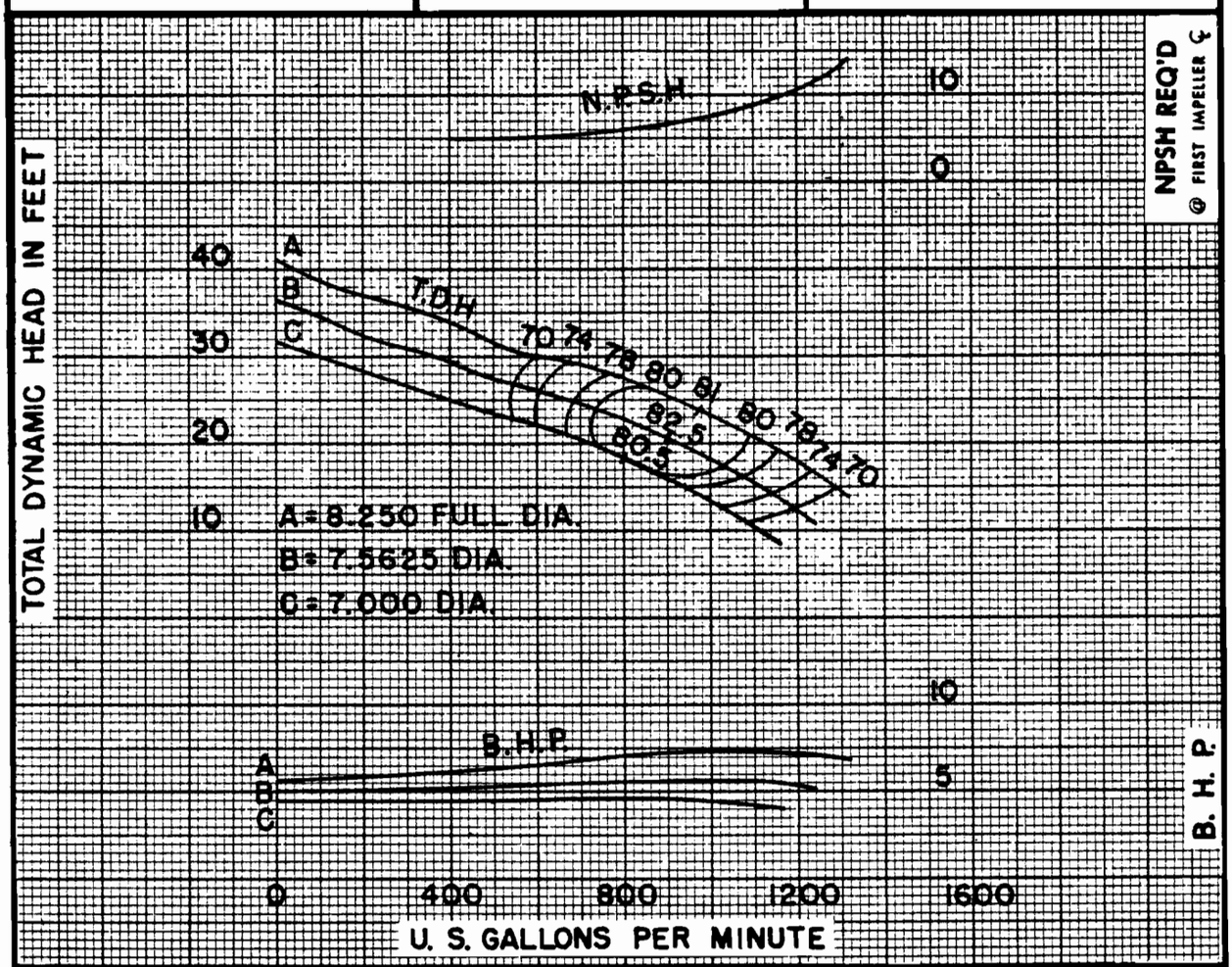

DIMENSIONS IN INCHES	A	B	C	E	F_1	F_2	G	H	K	L	N	P	S	T	W	X	Y	Z	ZZ
	7 3/4	10 5/16	9	11 3/4	12	16	3 3/4	27 1/8	27 1/8	8	8-10-12	10	3 3/4	13 1/16	9	11 1/4	13 1/8	13 7/8	10 3/4

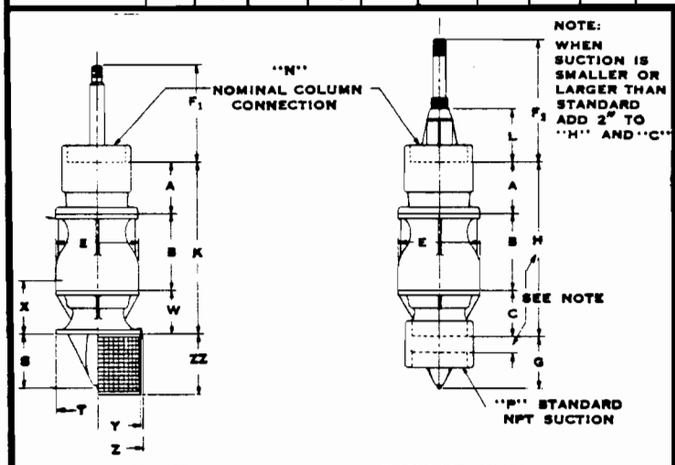

OPEN LINESHAFT W/SUCTION BELL

ENCLOSED LINESHAFT W/SUCTION CASE

PUMP DATA

Thrust Constant (K) 15.5 W.R.² 2.164 Lb. Ft.²
Shaft Dia. 1 11/16" Max. Sphere 1"
Eye Area 32.2 in² Max. Head (Std. Const.) 617'
Max. Number of Stages (Std. Const.) 15
Axial Clearance (Std.) 1/2" Axial Clearance (Max.) 1"

NOTES:

"K" is length of a one stage assembly — from lip of bell to column butt.
"H" is length of a one stage assembly — from end of suction pipe to column butt.
"Y" is strainer diameter.
"Z" is maximum diameter across strainer fasteners.
WR2 is per stage for impeller, collet and one stage shaft length.
Maximum head indicated is based on cold water with 1.0 specific gravity.

FLOWAY PUMPS, INC.
FRESNO, CALIFORNIA

NOT FOR CERTIFICATION

1770 RPM ENCLOSED TYPE IMPELLER 12FKL-S

NUMBER OF STAGES	EFFICIENCY CHANGE (NO. OF POINTS) SEE NOTE
1	

HORSEPOWER WILL BE AFFECTED BY CHANGE IN EFFICIENCY

PUMP DATA

Shaft Dia.(IN)	1 11/16
Maximum Sphere (IN)	1
Maximum Head (FT)*	617
Min. Submergence (IN)**	24
Impeller Weight (LBS)	25.6
Thrust Constant (K)	13.5
Thrust Bal Const. (K)	N/A
Bowl O.D.(IN.)	11 3/4
Bowl Height (IN.)	10 5/16
Bell DIA. (T) (IN.)	13 1/16
Strainer height (IN.)	10 3/4
Impeller C-line(X)(IN.)	11 1/4
Eye Area (IN^ 2)	32.2

NOTES

Performance indicated based on cold water with specific gravity of 1.0.

* Standard Construction.

** Minimum submergence over lip of bell to prevent vortexing.

Efficiency improvements are available in certain instances. Please contact the factory.

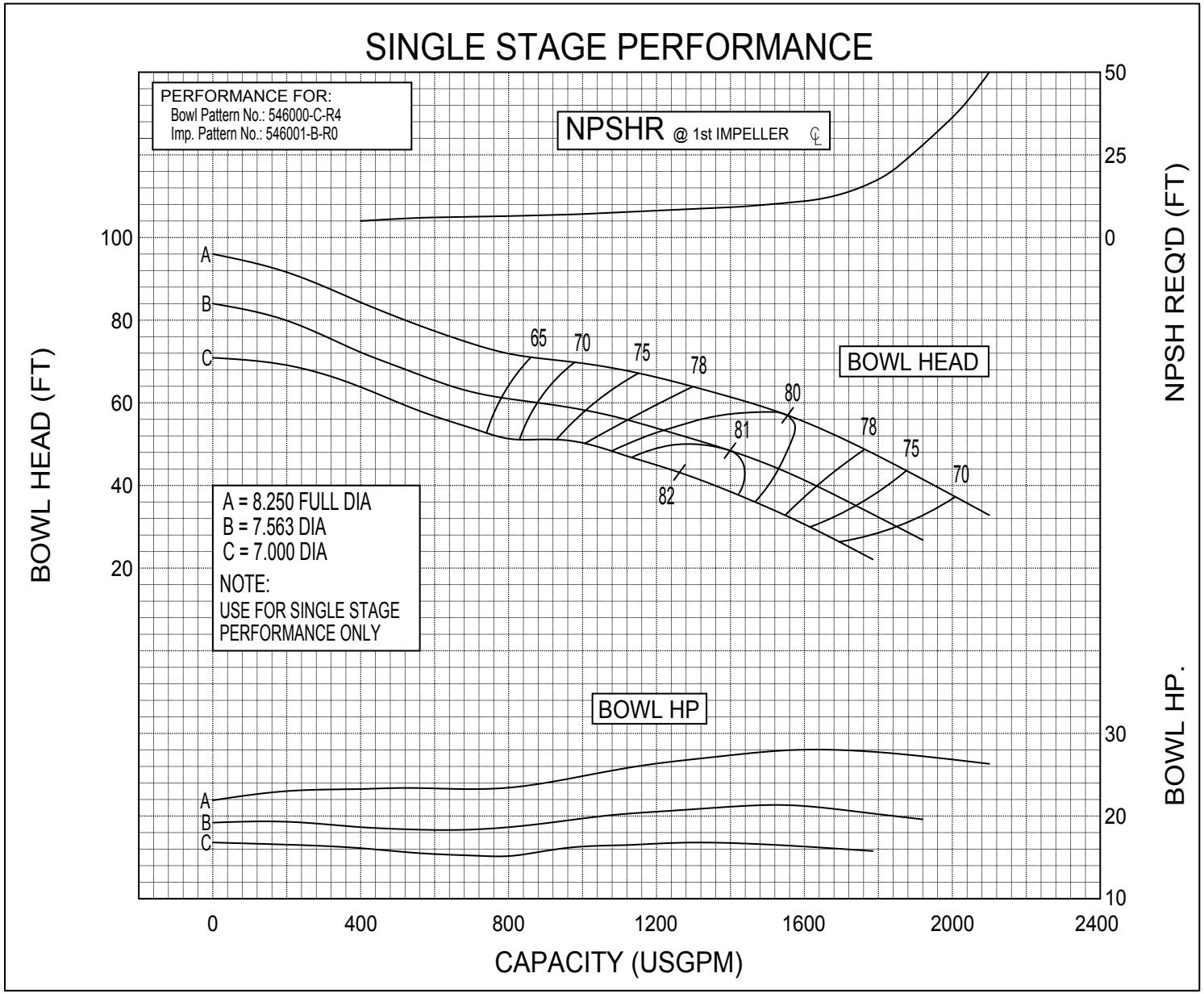

1770 RPM ENCLOSED TYPE IMPELLER 12FKL-M

NUMBER OF STAGES	EFFICIENCY CHANGE (NO. OF POINTS) SEE NOTE
1	
2	- 1
3	- 0

HORSEPOWER WILL BE AFFECTED BY CHANGE IN EFFICIENCY

PUMP DATA

Shaft Dia.(IN)	1 11/16
Maximum Sphere (IN)	1
Maximum Head (FT)*	617
Min. Submergence (IN)**	24
Impeller Weight (LBS)	25.6
Thrust Constant (K)	13.5
Thrust Bal Const. (K)	N/A
Bowl O.D.(IN.)	11 3/4
Bowl Height (IN.)	10 5/16
Bell DIA. (T) (IN.)	13 1/16
Strainer height (IN.)	10 3/4
Impeller C-line(X)(IN.)	11 1/4
Eye Area (IN^ 2)	32.2

NOTES

Performance indicated based on cold water with specific gravity of 1.0.

* Standard Construction.

** Minimum submergence over lip of bell to prevent vortexing.
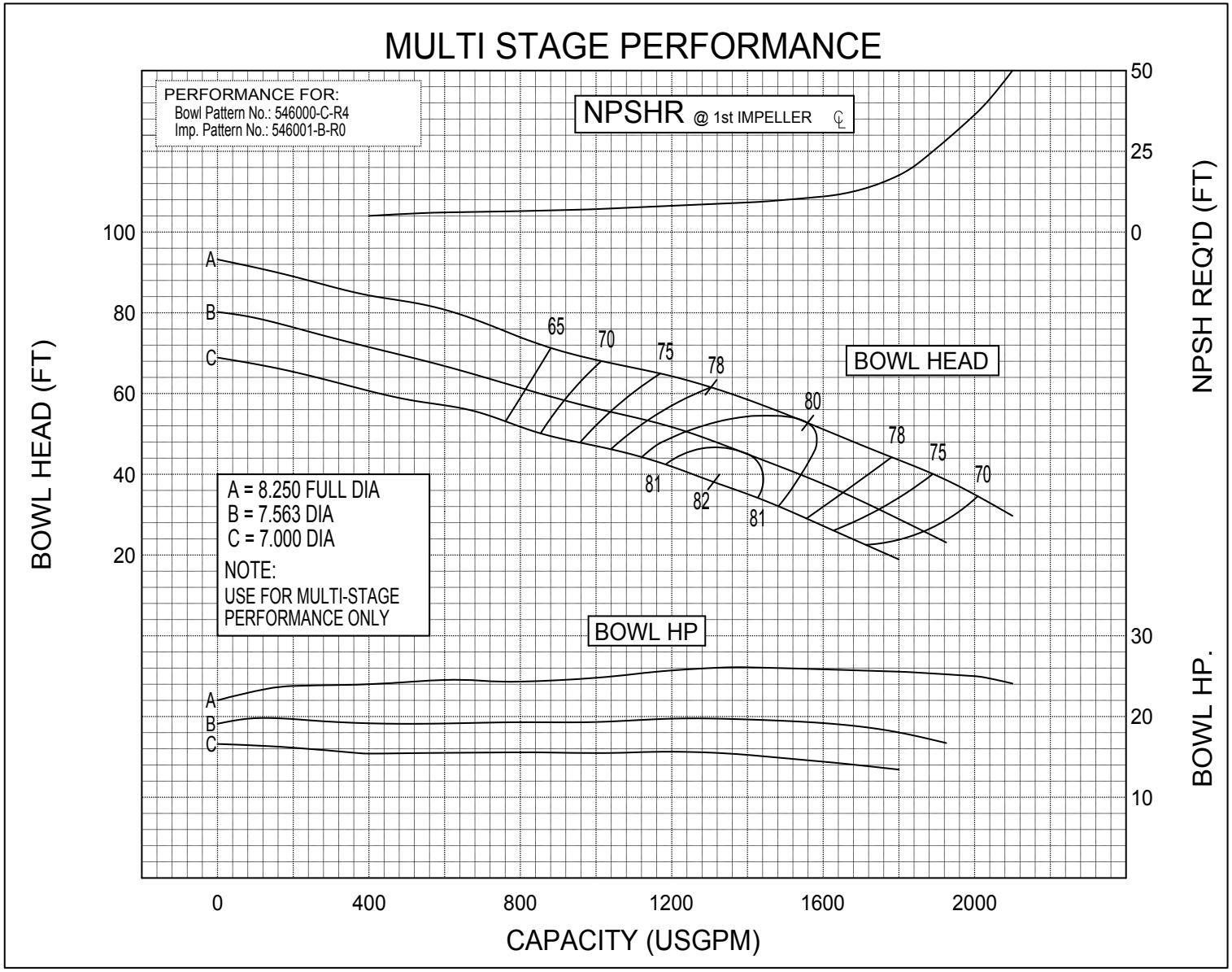
Efficiency improvements are available in certain instances. Please contact the factory.