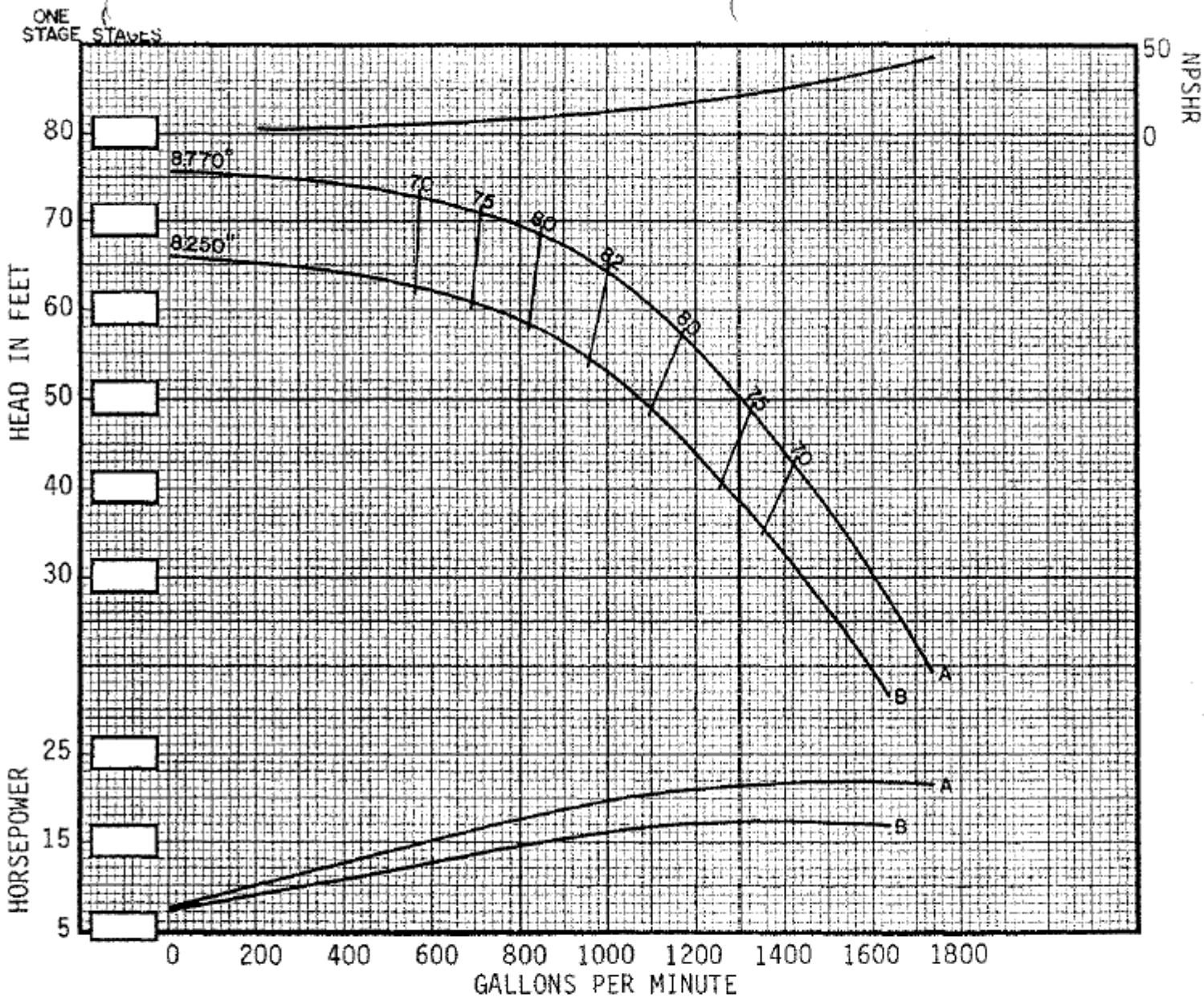

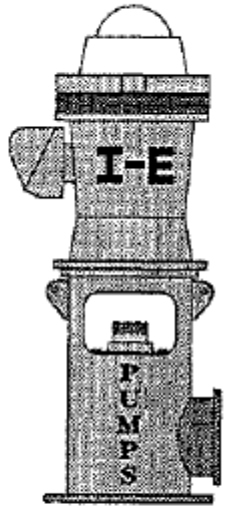

1567 E. HWY. 160
P.O. BOX 112
MONTE VISTA
COLORADO 81144

(719) 852-5174

I-E
"TOP-O-THE LINE"

11EH-1000	1770
DESIGN	R.P.M.

SECTION N
PAGE 219
DATE 10-11-90

IMPELLER DATA

TRIM DIAMETER: A 8.770 ", B 8.250 " C _____ ", _____ ", _____ ", _____ ".

One stage deduct -3 %, 2 stage deduct -2 %, 3 stage deduct -1 %.

EFFICIENCY CORRECTION: _____ stage add _____ %, _____ stage add _____ %, _____ stage add _____ %.

EFFECTIVE IMPELLER EYE AREA 20.34 sq. inches NUMBER OF IMPELLER VANES _____

THRUST CONSTANT (K) 7.8 Lbs./Ft. WR^2 (See Note *) 532 Lbs. Ft.^{2} MAXIMUM SPHERE SIZE 875 ".

IMPELLER EYE FLUID VELOCITY CONSTANT (K_e) _____ IMPELLER PERIPHERAL SPEED CONSTANT (N_i) _____ (Ft./Sec.) _____ (Ft/Min.)

BOWL ASSEMBLY DATA

NOMINAL DIAMETER = 10.875 ", MINIMUM DIAMETER - 10.625 ", BELL DIAMETER 13.875 ", MIN. BELL DIAMETER 12.875 ".

MAXIMUM NO. STAGES (Std. Constr.) 5 MAXIMUM HEAD (Std. Constr.) 706 Ft.

DIAMETER IMPELLER SHAFT 1.500 ", MINIMUM IMPELLER SHAFT THREADS 1 ".

LATERAL (See explanation below)* NOMINAL _____ ", MINIMUM _____ ", STANDARD .937 ", MAXIMUM _____ ".

WEAR RING CLEARANCE (Nominal) .012 ", SHAFT / BEARING CLEARANCE (Nominal) .007 ".

FORMULAS: HYDRAULIC THRUST = K Factor x Laboratory Head in feet = 305 Lbs.

IMPELLER PERIPHERAL SPEED (U_2) = N_i Constant x Impeller Diameter _____ Ft./Sec. or _____ Ft./Min.

IMPELLER EYE FLUID VELOCITY (V_e) = K_e Constant x GPM = _____ Ft./Sec.

NOTE @ = per impeller. WR^2 includes impeller, impeller collet, and a stage length of impeller shaft

NOTE * = see lateral definition on Page 8.1, Section 2.1, dated 2/15/63.

NOTE – NOMINAL PROJECTIONS ARE: SHAFT = 14 ", Tube = 6 "
(referenced pipe butt or flange face)

A – Length one-stage assembly / threaded suction
B – Length one-stage assembly / bell suction
C – Additional stage length
D – Bowl diameter
E – Bell diameter
F – Projection of bearing hub / bell suction
G – O.D. bell suction basket strainer
J – Basket length below bell suction lip
K – Minimum required submergence, above bottom of bearing hub
L – Bottom of bearing hub to impeller eye
M – Pipe butt to top bowl flange
N – Column pipe flange to bowl flange
P – Suction case (or coupling) thread engagement
R – Suction case flange diameter
S – Flange to flange / bowl to column

APPLICABLE DIMENSIONS
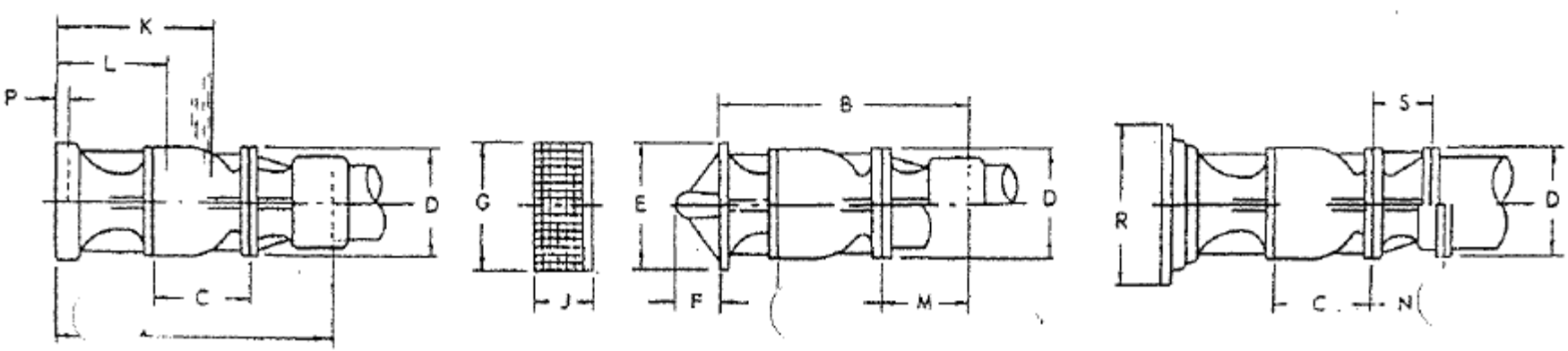
DIMENSION	A	B	C	D	E	F	G	J	K	L	M	N	P	R	S
INCHES	25.6875	29.4375	9.875	10.875	13.875