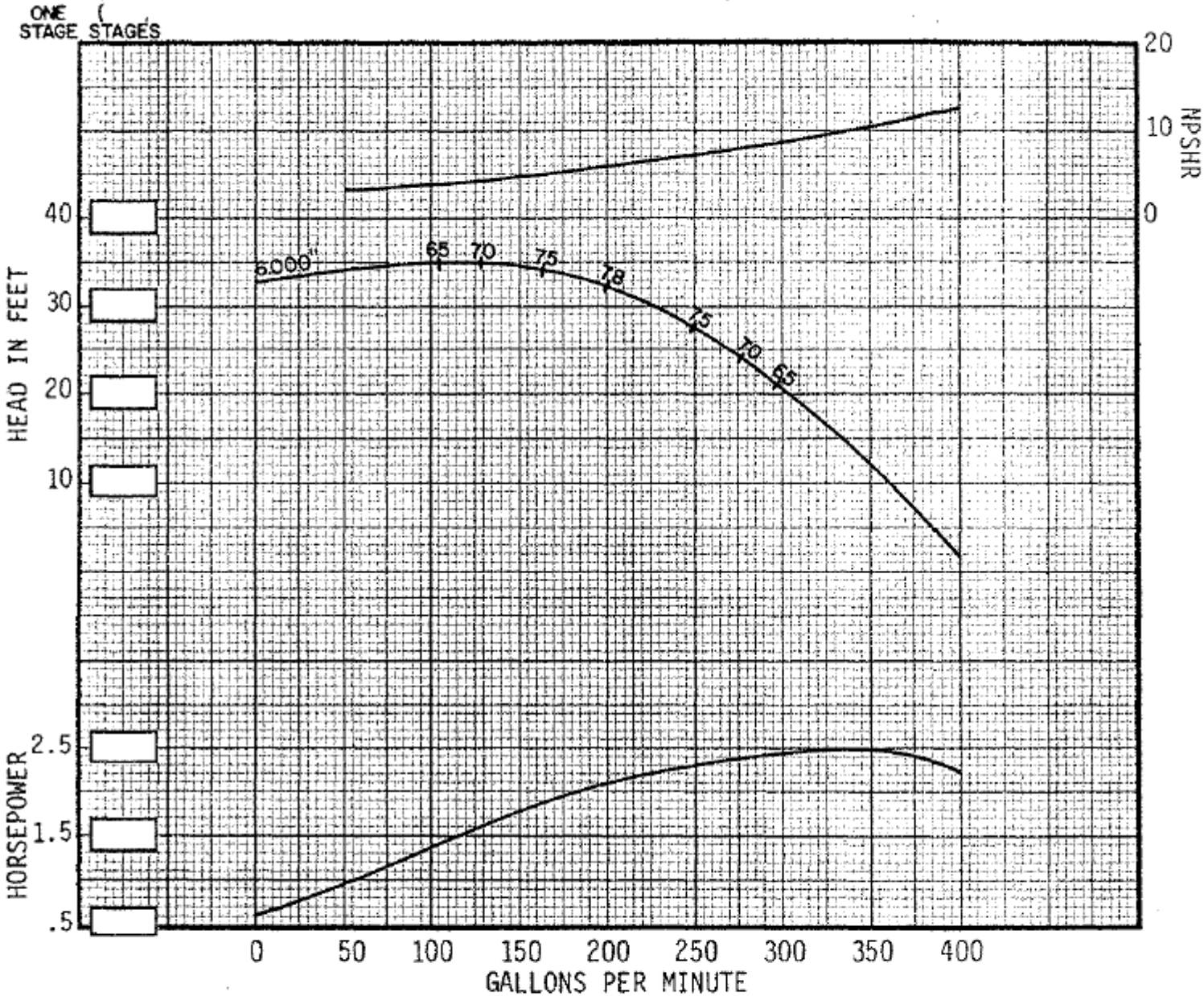

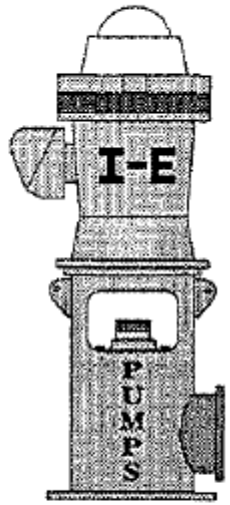

1567 E. HWY. 160
P.O. BOX 112
MONTE VISTA
COLORADO 81144

(719) 852-5174

I-E

"TOP-O-THE LINE"

8CH-200	1770
DESIGN	R.P.M.

SECTION N
PAGE 203
DATE 10-11-90

IMPELLER DATA

TRIM DIAMETER: A 6.000 ", B _____ " C _____ ", _____ ", _____ ", _____ ".

One stage deduct -4 %, 2 stage deduct -3 %, 3 stage deduct -2 %.

EFFICIENCY CORRECTION: _____ stage add _____ %, _____ stage add _____ %, _____ stage add _____ %.

EFFECTIVE IMPELLER EYE AREA 8.63 sq. inches NUMBER OF IMPELLER VANES _____

THRUST CONSTANT (K) 3.6 Lbs./Ft. WR^2 (See Note @) .105 Lbs. Ft.^{2} MAXIMUM SPHERE SIZE .750 ".

IMPELLER EYE FLUID VELOCITY CONSTANT (K_e) _____ IMPELLER PERIPHERAL SPEED CONSTANT (N_i) _____ (Ft./Sec.) _____ (Ft/Min.)

BOWL ASSEMBLY DATA

NOMINAL DIAMETER = 7.875 ", MINIMUM DIAMETER = 7.625 ", BELL DIAMETER 11.375 ", MIN. BELL DIAMETER 10.375 ".

MAXIMUM NO. STAGES (Std. Constr.) 15 MAXIMUM HEAD (Std. Constr.) 1104 Ft.

DIAMETER IMPELLER SHAFT 1.250 ". MINIMUM IMPELLER SHAFT THREADS 1 ".

LATERAL (See explanation below)* NOMINAL _____ ", MINIMUM _____ ", STANDARD _____ ", MAXIMUM _____ ".

WEAR RING CLEARANCE (Nominal) .012 ", SHAFT / BEARING CLEARANCE (Nominal) .007 ".

FORMULAS: HYDRAULIC THRUST = K Factor x Laboratory Head in feet = 478 Lbs.

IMPELLER PERIPHERAL SPEED (U_2) = N_i Constant x Impeller Diameter _____ Ft./Sec. or _____ Ft./Min.

IMPELLER EYE FLUID VELOCITY (V_e) = K_e Constant x GPM = _____ Ft./Sec.

NOTE @ = per impeller. WR^2 includes impeller, impeller collet, and a stage length of impeller shaft

NOTE * = see lateral definition on Page 8.1, Section 2.1, dated 2/15/63.

NOTE – NOMINAL PROJECTIONS ARE: SHAFT = 14 ", Tube = 6 "
(referenced pipe butt or flange face)

A – Length one-stage assembly / threaded suction
B – Length one-stage assembly / bell suction
C – Additional stage length
D – Bowl diameter
E – Bell diameter
F – Projection of bearing hub / bell suction
G – O.D. bell suction basket strainer
J – Basket length below bell suction lip
K – Minimum required submergence, above bottom of bearing hub
L – Bottom of bearing hub to impeller eye
M – Pipe butt to top bowl flange
N – Column pipe flange to bowl flange
P – Suction case (or coupling) thread engagement
R – Suction case flange diameter
S – Flange to flange / bowl to column

APPLICABLE DIMENSIONS
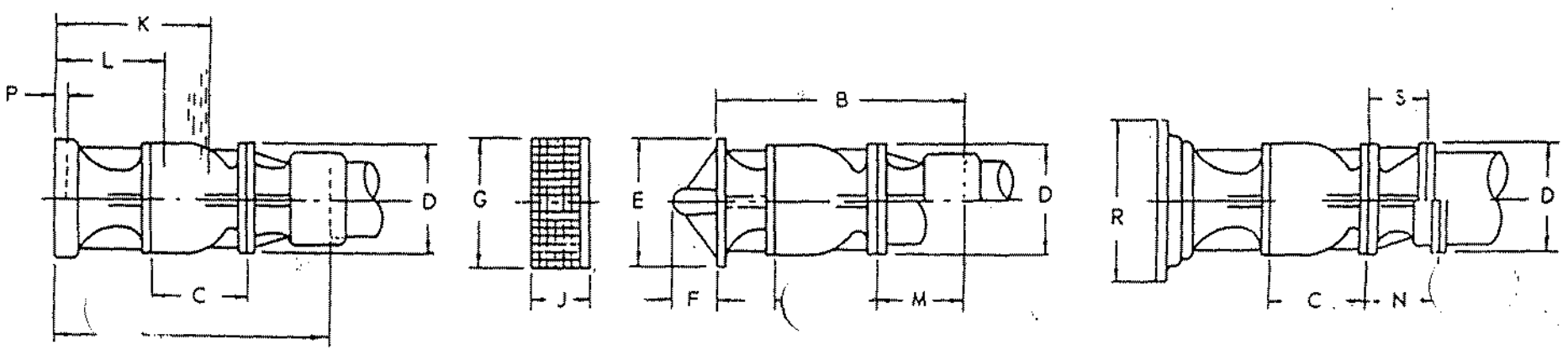
DIMENSION	A	B	C	D	E	F	G	J	K	L	M	N	P	R	S
INCHES	18.625	21.375	6.375	7.875	11.375