CURVE NO. 12-231 11-1-77	No. Stages	Eff. Change	MATERIAL	Eff. Change
	1	0	IMP.—C.I.	
	2		IMP.—NI-RI	
	3		BOWL—BRZ.	
	4		BOWL—NI-R.	

30 DM — **1180** R.P.M.

SINGLE STAGE LAB PERFORMANCE WITH STANDARD MATERIALS. EFFICIENCY SHOWN FOR 1 OR MORE STAGES. HORSE POWER SHOWN FOR ONE STAGE BASED ON 1 STAGE EFFICIENCY. CORRECTIONS SHOULD BE MADE FOR STAGES AND MATERIAL.

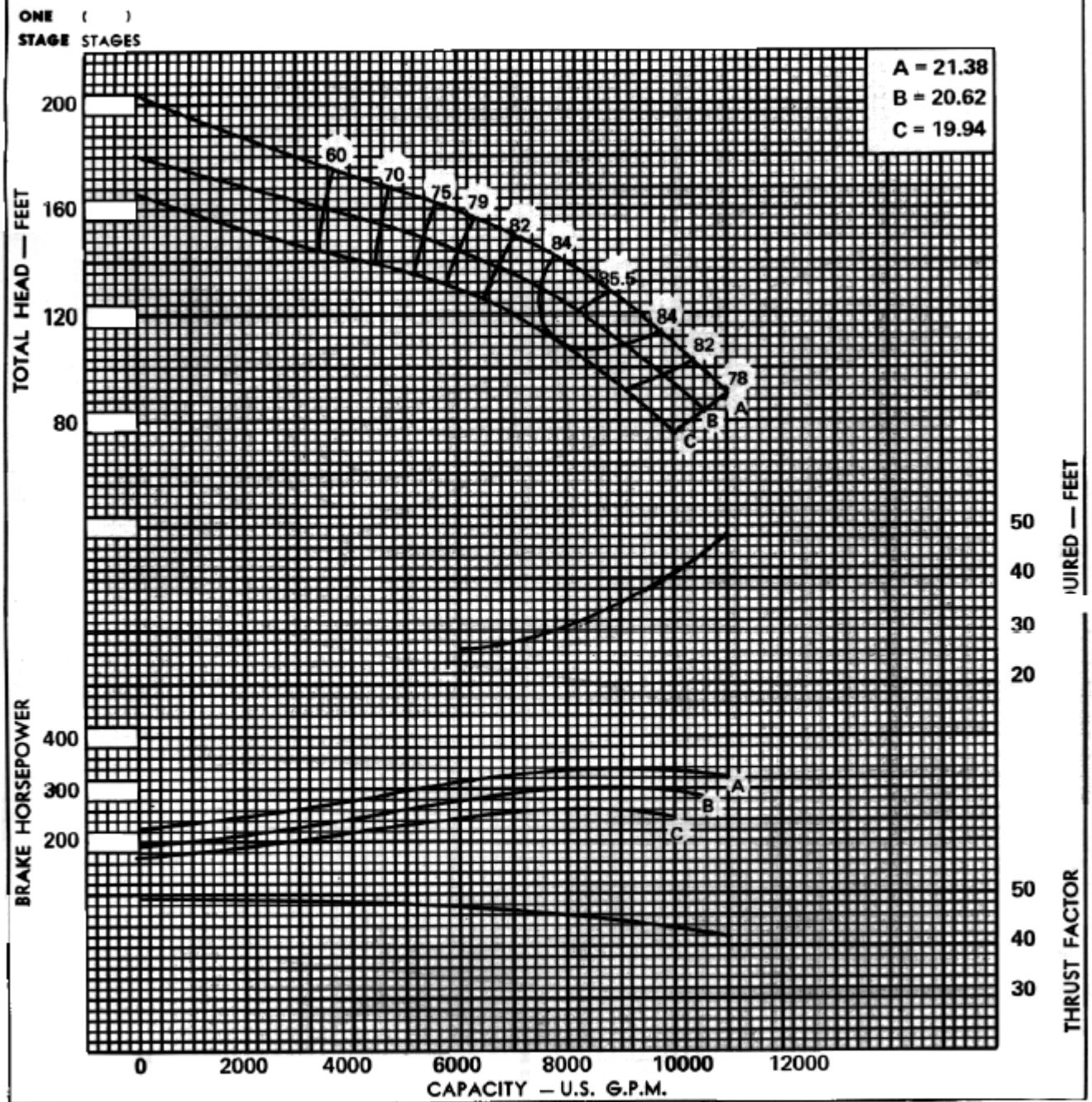

EYE AREA — SQ. IN.	=	107	IMPELLER WT.-LBS.	=	198
WR² PER IMPELLER	=	68 LB.-FT.²	ONE STAGE WT.-LBS.	=	3060
MAX. SPHERE SIZE	=	2 in.	ADD'L STAGE WT.-LBS.	=	1605
MAX. NO. STD. STAGES	=	5	IMPELLER NUMBER	=	15D15
MAX. OPERATING P.S.I.	=	480	DISCH. SIZES	=	20
STD. LATERAL	=	1.0 in.	SUCTION SIZES	=	BELL
STD. SHAFT DIA.	=	3.188 in.	MAX. LATERAL	=	——— in.
MAX. SHAFT DIA.	=	3.437 in.	BOWL CONN.		FLANGED-KEYED
MIN. SUBMERGENCE	=	36 in.	ADD 2'–1¾" " PER ADDITIONAL STAGE.		

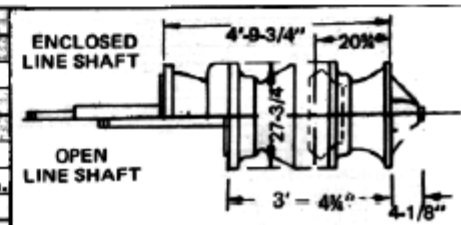

CURVE NO.

CHANGE EFFICIENCY AS FOLLOWS	NUMBER OF POINTS	FOR NUMBER OF STAGES

NOTE: ANY CHANGE IN EFFICIENCY CHANGES EITHER THE HEAD OR HORSE POWER IN PROPORTION.

LAYNE & BOWLER, INC.
Memphis, Tenn.

30" DM
1180 RPM

SINGLE STAGE LABORATORY
HEAD & HORSE POWER
THRUST "K" = 49

15D15
15SK11

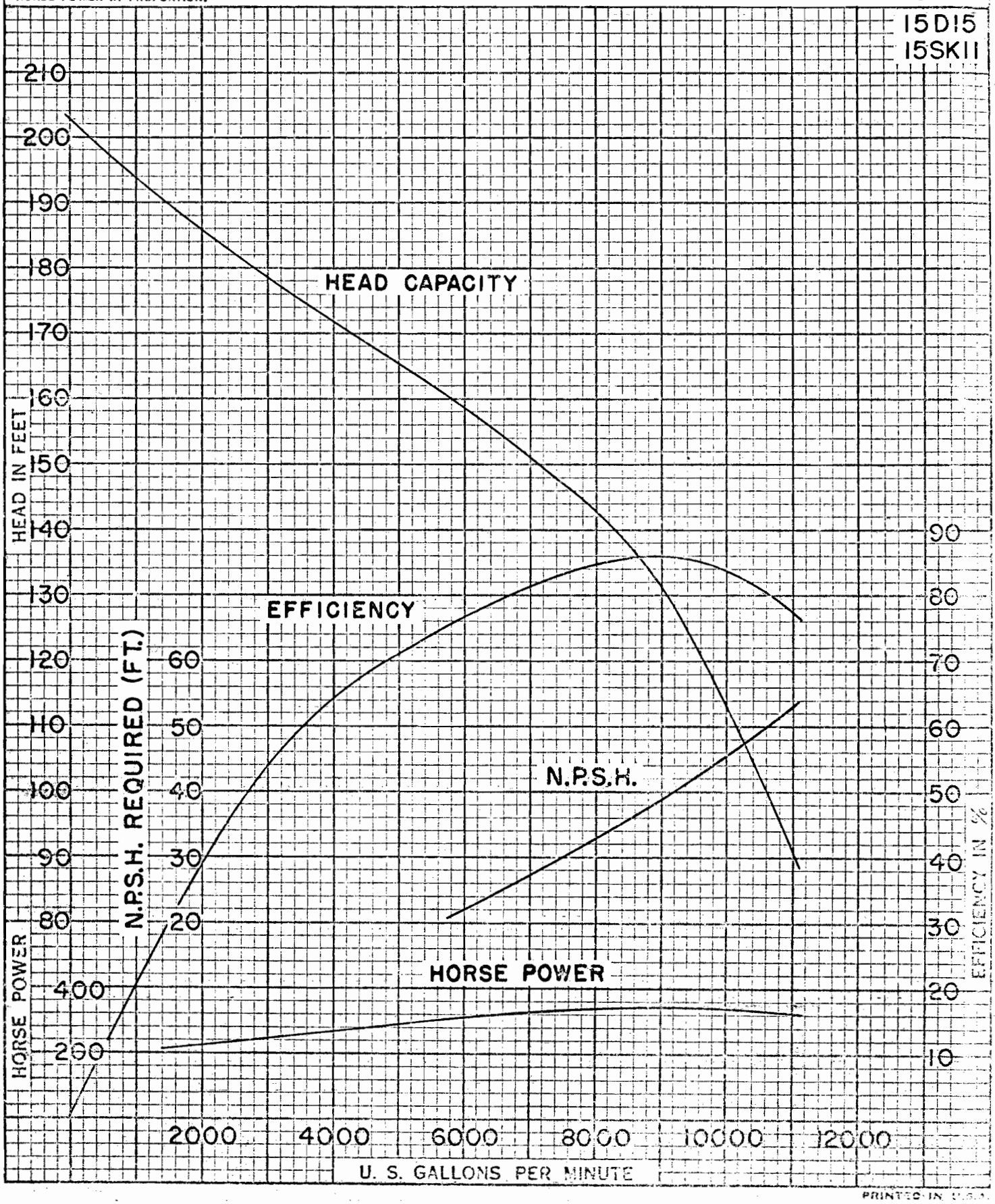

PRINTED IN U.S.A.

30"DM - 1180 RPM
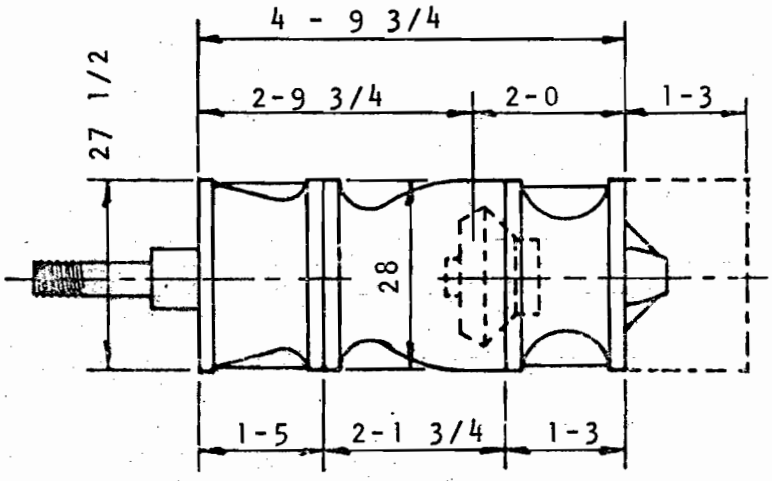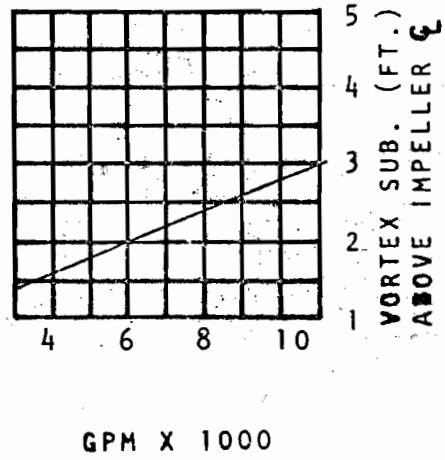
IMPELLER (PATTERN NO.)	15D15 or 15SK11
INTERMEDIATE (PATTERN NO.)	15D8
SHAFT SIZE (INCHES)	3 3/16 - 1502 HP
TUBE SIZE (INCHES)	5
STANDARD LATERAL (INCHES)	1
DISCHARGE CONNECTION (FLANGED)(INCHES)	20
SUCTION CONNECTION	BELL
IMPELLER FULL DIAMETER (INCHES)	21 3/8
IMPELLER EYE AREA (INCHES SQUARED)	107
IMPELLER EYE DIAMETER (INCHES)	12 3/4
IMPELLER WEIGHT (LB)	225
IMPELLER WR^2 (LB FT. SQUARED)	68
MAXIMUM DIAMERER SOLID (INCHES)	2
MAXIMUM WORKING PRESSURE (PSI)	499
MAXIMUM HYDROSTATIC PRESSURE(PSI)	664
MAXIMUM PRESSURE (STANDARD STUDS)(PSI)	317
MAXIMUM STAGES (BOWL PRESSURE)	5
MAXIMUM STAGES (SHAFT)	4
BOWL WEIGHT (ONE STAGE) (LB)(NET)	3060
BOWL WEIGHT (ADDITIONAL STAGES) (LB)(NET)	1605