WINTROATH PUMPS – *DIVISION OF WORTHINGTON CORPORATION*

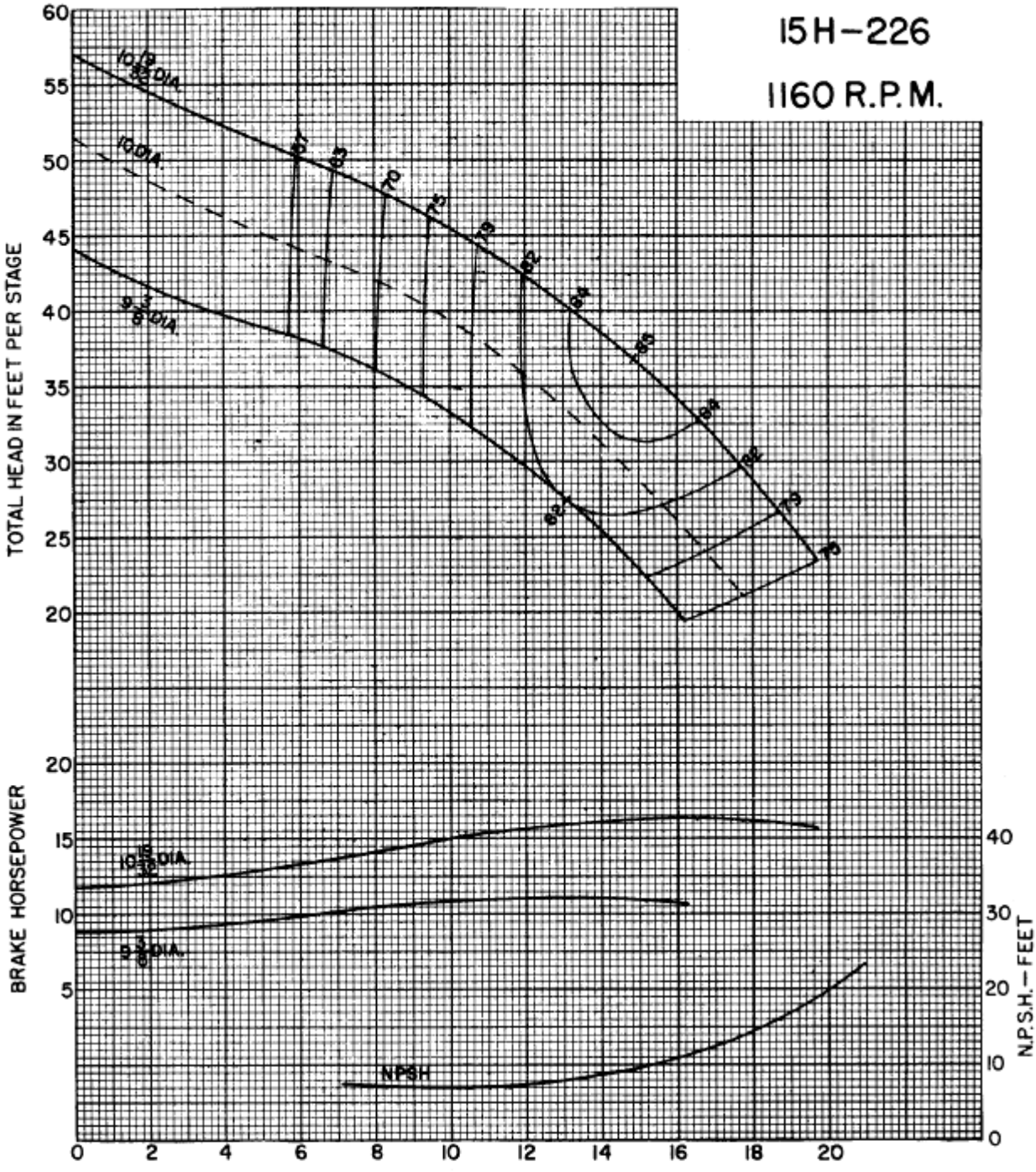

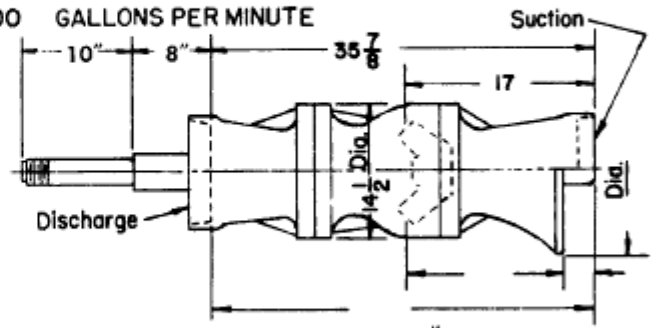

For additional stages add 13 3/8" per stage.

Efficiency shown is for 4 stages or more, with standard materials. For fewer stages or other materials change efficiency as shown.

No. of stages	Eff. change	MATERIAL	Eff. change
6	–	Impeller–bronze	
5	–	Impeller–c.i.	
4	–	Impeller–c.i. enm.	
3	-0.5	Bowl–c.i. enm.	
2	-2.0	Bowl–cast iron	
1	-5.0	Bowl–bronze	

Standard materials	
Impeller – bronze	
Bowl – cast iron / enamelled	
Thrust factor	15.7
Rotor wt. per stage (lbs.)	58.2
Bowl wt. 1st stage (lbs.)	457
Bowl wt. add'l. stage (lbs.)	186
Max. bowl horsepower	370
Impeller eye area (sq. in.)	34.2

Column pipe	12	10
Suction pipe	12	
Impeller shaft diameter	2.25	

ALH–8021