WINTROATH PUMPS – *DIVISION OF WORTHINGTON CORPORATION*

10 L–22
1760 R.P.M.

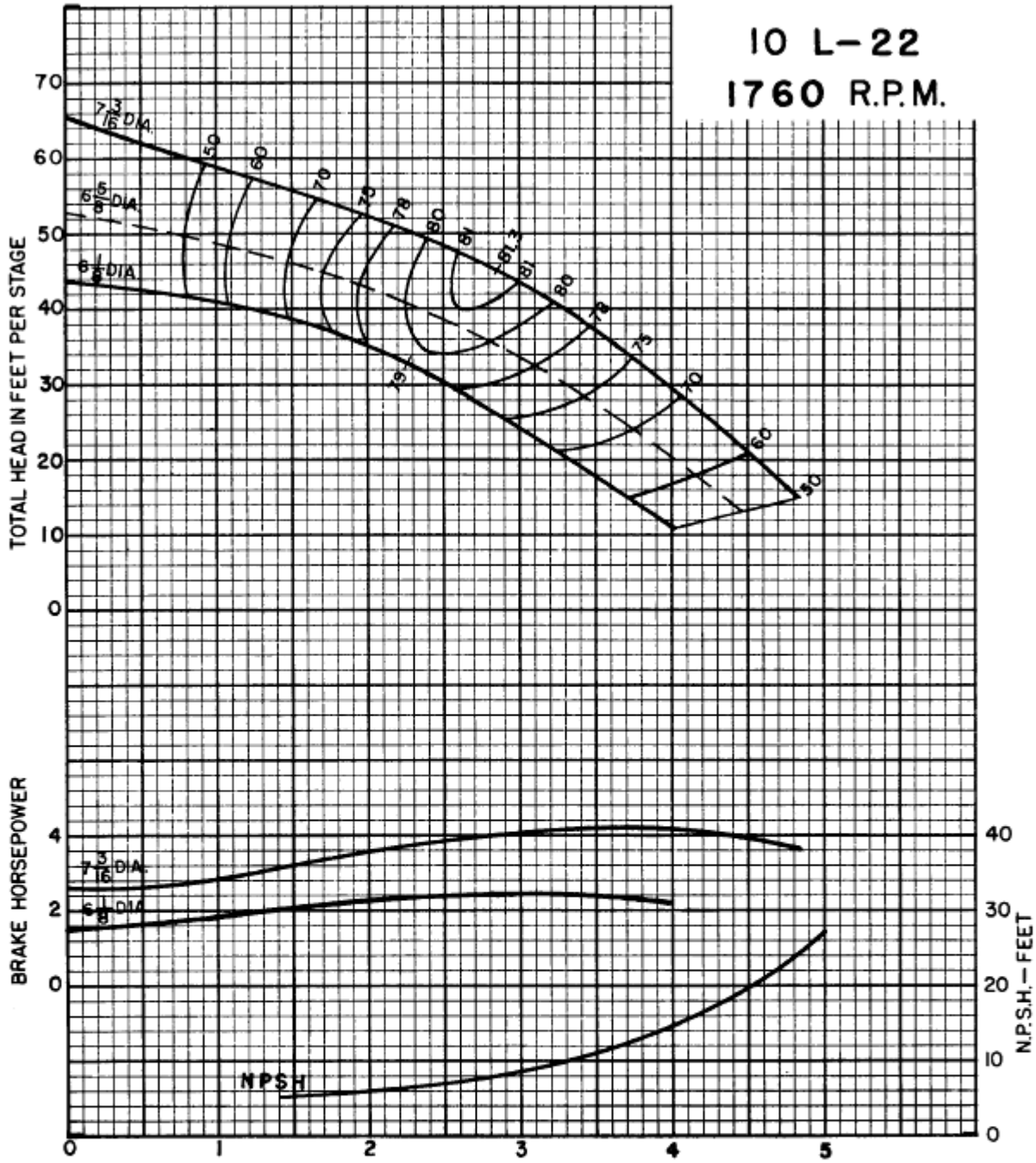

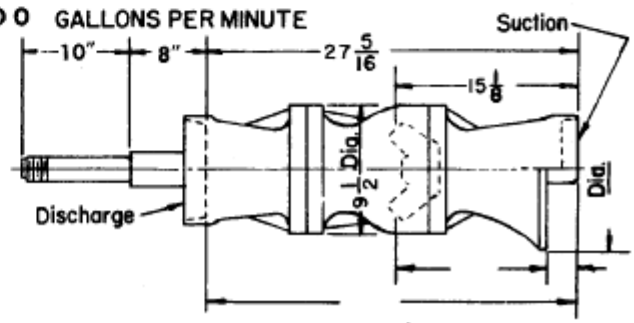

For additional stages add $7\frac{1}{4}$ per stage.

Efficiency shown is for 4 stages or more, with standard materials. For fewer stages or other materials change efficiency as shown.

No. of stages	Eff. change	MATERIAL	Eff. change
6	—	Impeller–bronze	
5	—	Impeller–c.i.	
4	—	Impeller–c.i. enm.	
3	–1	Bowl–c.i. enm.	
2	–3	Bowl–cast iron	
1	–5	Bowl–bronze	

Standard materials	
Impeller – bronze	
Bowl – cast iron / enamelled	
Thrust factor	4
Rotor wt. per stage (lbs.)	14
Bowl wt. 1st stage (lbs.)	163
Bowl wt. add'l. stage (lbs.)	57
Max. bowl horsepower	140
Impeller eye area (sq. in.)	7.8

Column pipe	5
Suction pipe	5
Impeller shaft diameter	1.5

ALH – 8043

Litho'd in U.S.A.