WORTHINGTON PUMP PERFORMANCE DATA

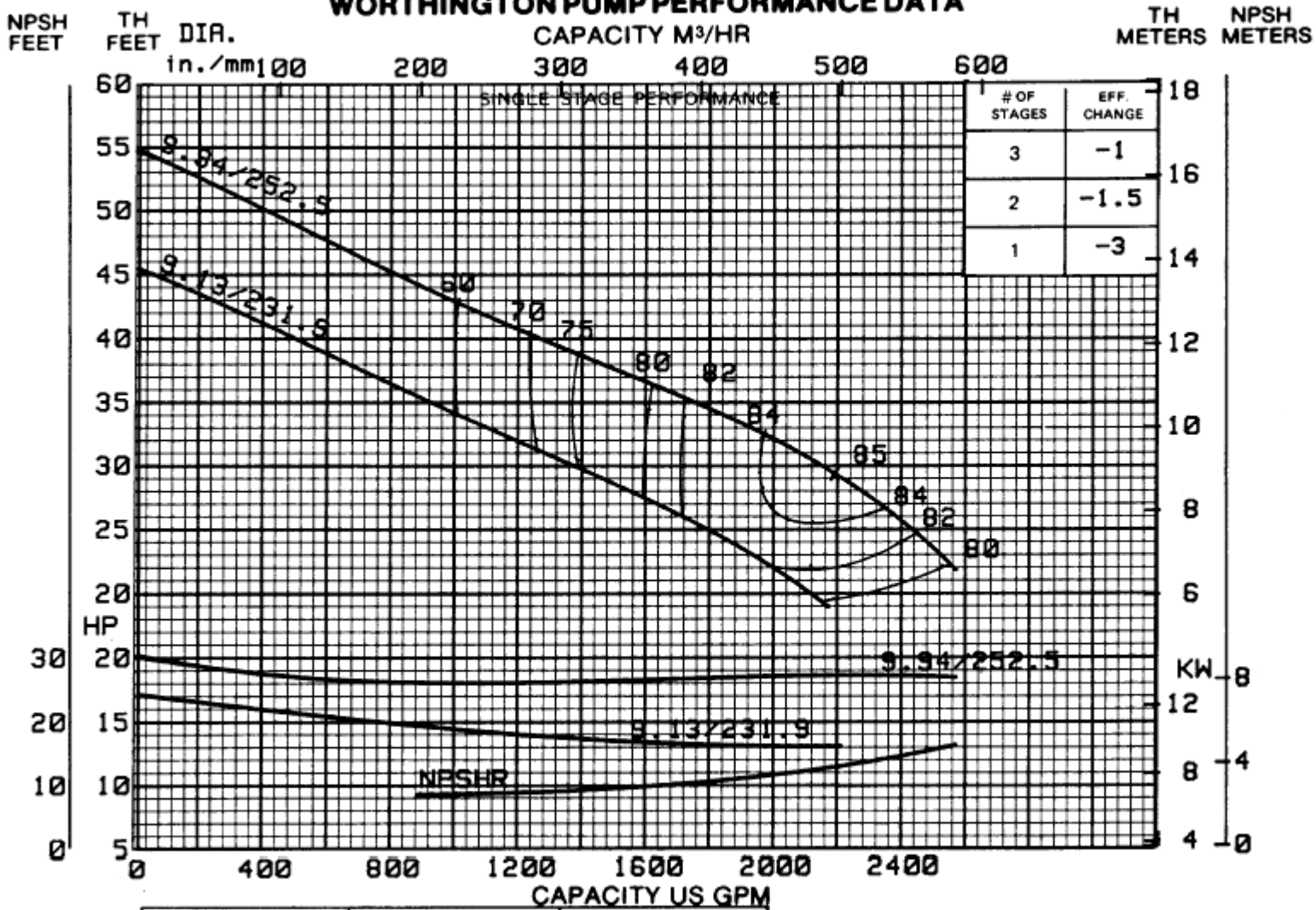

# OF STAGES	EFF. CHANGE
3	-1
2	-1.5
1	-3

CURVE NO.	SIZE	RPM
A-24169	15HH340	1160

Customer _____ Worthington S.O. _____
Project _____ Proposal/Order No. _____
Cust. Proposal/Order No. _____ Certified By _____
Customer Item No. _____ Date _____

Liquid/Service _____
Capacity _____ Head _____ Sp. Gr. _____ Temp. _____ °F/°C Visc. _____ SSU

2400-8 Page 101
May 1986
15HH340
1160 RPM

RATING CURVES
(60 CYCLE)

15HH-340
1160 RPM

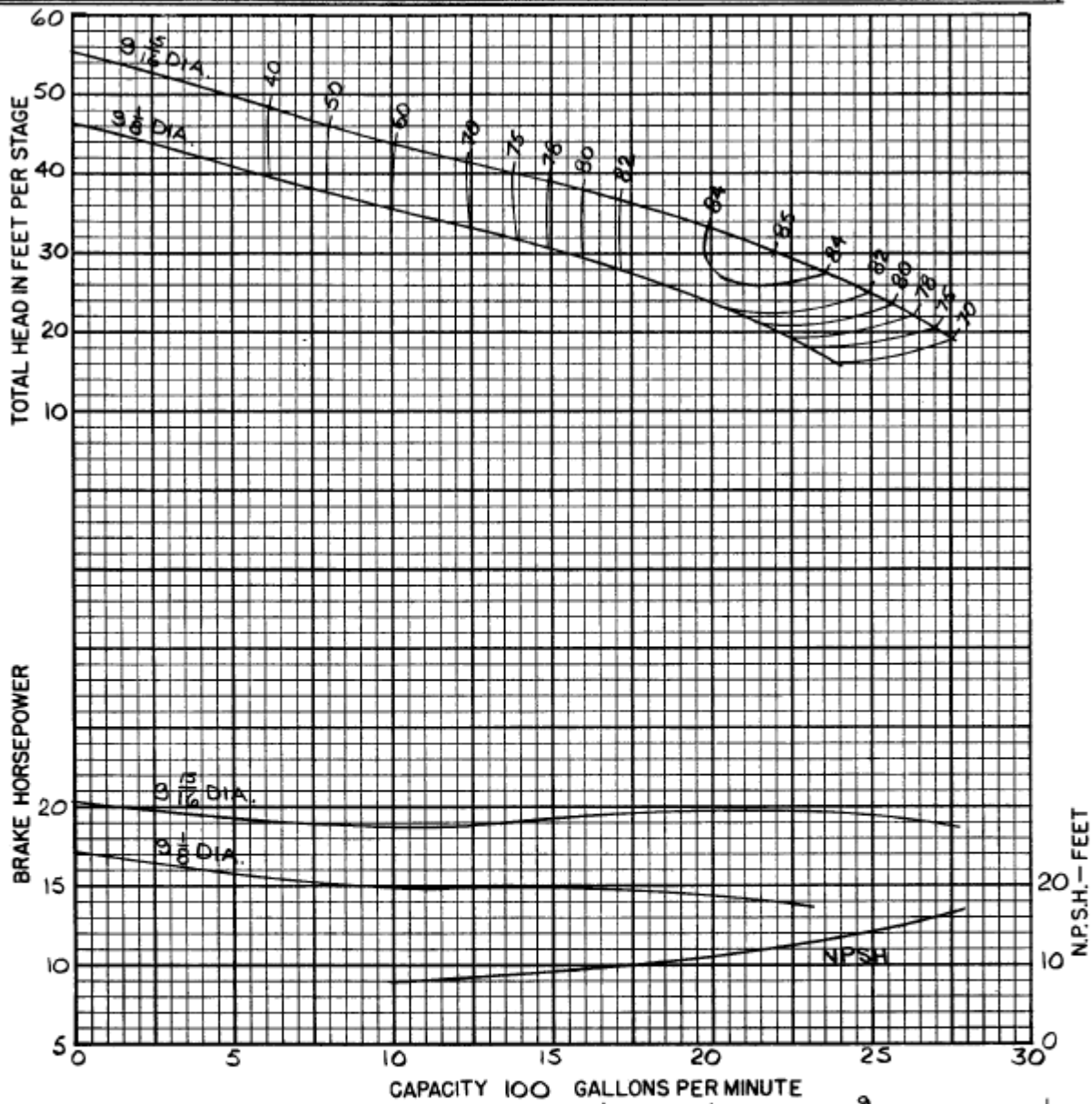

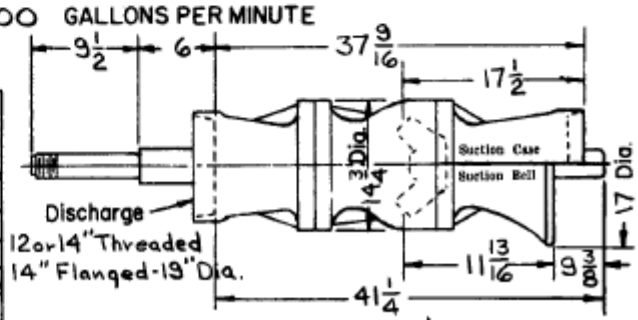

For additional stages add $15\frac{1}{4}$ per stage.

Efficiency shown is for 2 stages or more, with standard materials. For fewer stages or other materials change efficiency as shown.

No. of stages	Eff. change	MATERIAL	Eff. change
6	—	Impeller-bronze	—
5	—	Impeller-c.i.	-1
4	—	Impeller-c.i. enm.	+1
3	—	Bowl-c.i. enm.	—
2	—	Bowl-cast iron	-2
1	-1	Bowl-bronze	-1.5

Standard materials	
Impeller — bronze	
Bowl — cast iron / enamelled	
Thrust factor	25.4
Rotor wt. per stage (lbs.)	45
Bowl wt. 1st stage (lbs.)	415
Bowl wt. add'l. stage (lbs.)	180
Max. bowl horsepower	375
Impeller eye area (sq. in.)	53.5

Impeller shaft diameter	2.25	Column pipe	12	14
Minimum impeller shaft end play	.81	Suction pipe	14	