RATING CURVES
(60 CYCLE)

15QJA
1160 RPM

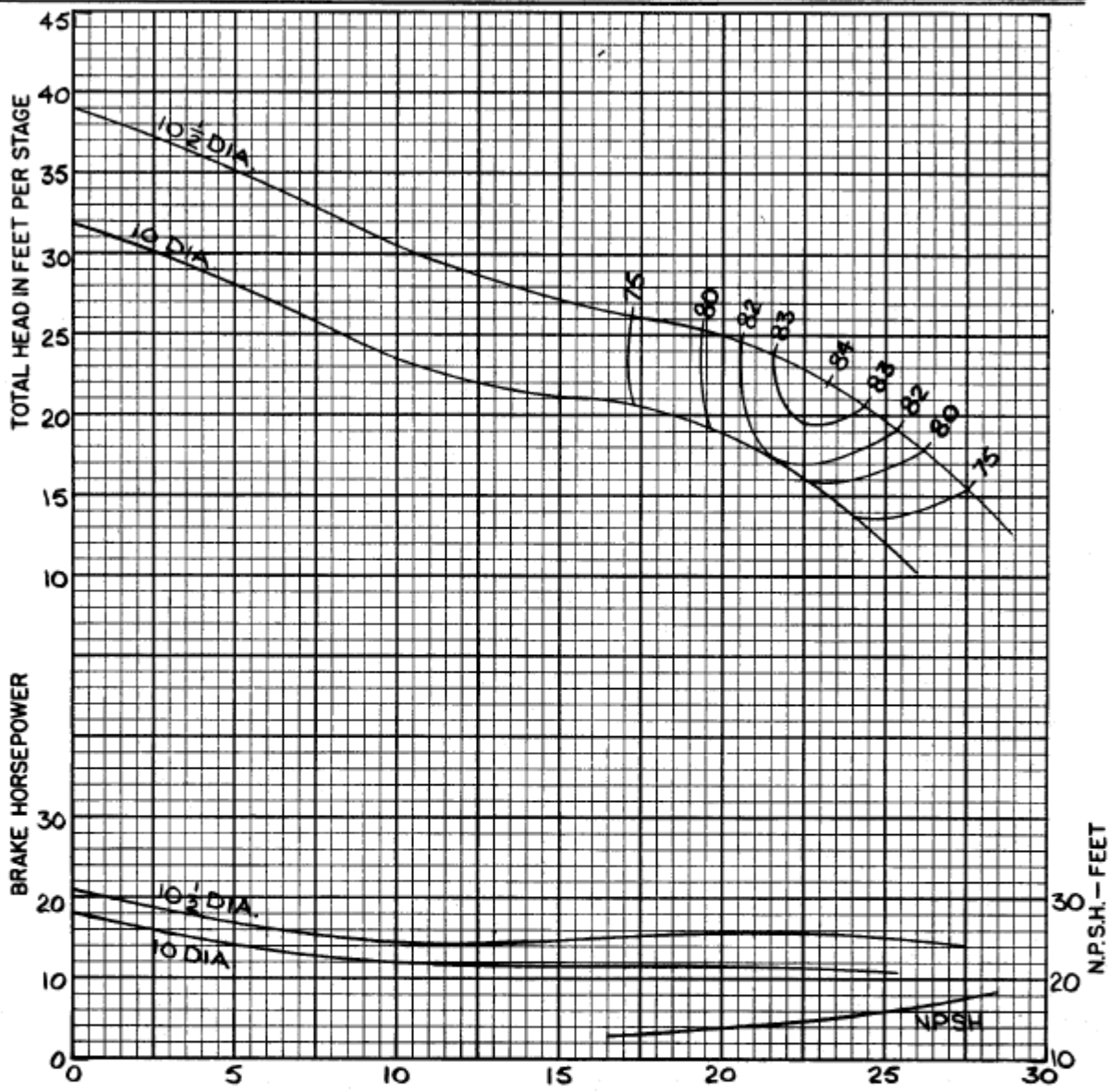

Efficiency shown is for 3 stages or more, with standard materials. For fewer stages or other materials change efficiency as shown.

No. of stages	Eff. change	MATERIAL	Eff. change	Standard materials	
				Impeller — bronze	
				Bowl — cast iron / enamelled	
6	—	Impeller-bronze	—	Thrust factor	20
5	—	Impeller-c.i.	-1	Rotor wt. per stage (lbs.)	35
4	—	Impeller-c.i. enm.	+1	Bowl wt. 1st stage (lbs.)	445
3	—	Bowl-c.i. enm.	+1	Bowl wt. add'l. stage (lbs.)	185
2	-1	Bowl-cast iron	—	Max. bowl horsepower	250
1	-2	Bowl-bronze	—	Impeller eye area (sq. in.)	47.1

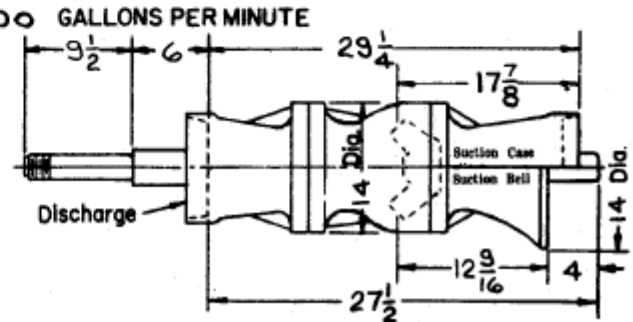

For additional stages add 15½ per stage.

Impeller shaft diameter	2	Column pipe	12		
Minimum impeller shaft end play	.5	Suction pipe	12		