WORTHINGTON PUMP PERFORMANCE DATA

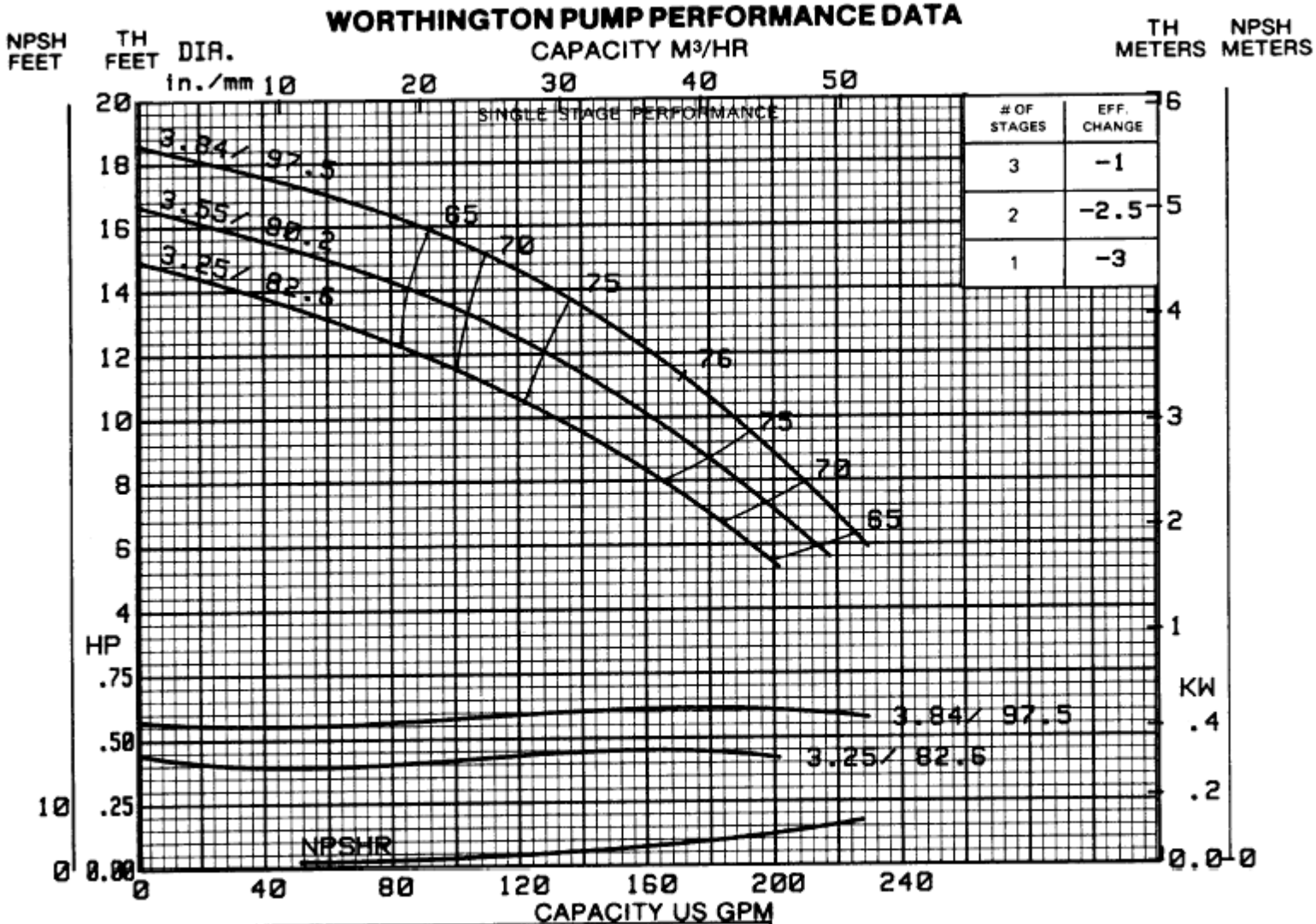

# OF STAGES	EFF. CHANGE
3	-1
2	-2.5
1	-3

CURVE NO.	SIZE	RPM
A-24104	6H18	1760

Customer _____ Worthington S.O. _____
Project _____ Proposal/Order No. _____
Cust. Proposal/Order No. _____ Certified By _____
Customer Item No. _____ Date _____

Liquid/Service _____
Capacity _____ Head _____ Sp. Gr. _____ Temp. _____ °F/°C Visc. _____ SSU

(60 CYCLE)

6H-18
1760 RPM

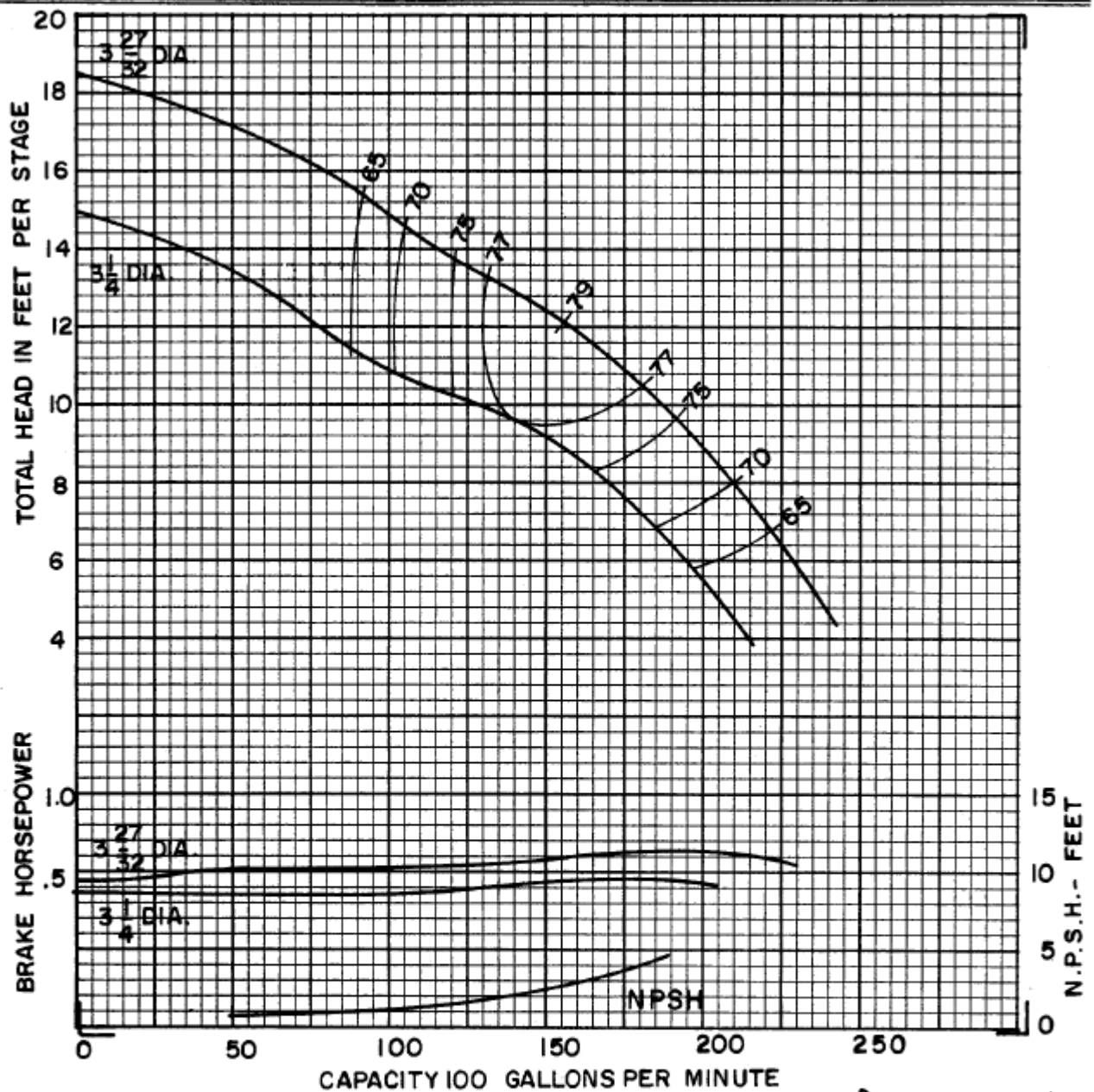

Efficiency shown is for 6 stages or more, with standard materials. For fewer stages or other materials change efficiency as shown.

No. of stages	Eff. change	MATERIAL	Eff. change
6	—	Impeller – bronze	—
5	-1.5	Impeller – c.i.	-1
4	-2	Impeller – c.i. enm.	+2
3	-2.5	Bowl – c.i. enm.	—
2	-4	Bowl – cast iron	-5
1	-6	Bowl – bronze	-4

Standard materials	
Impeller – bronze	
Bowl – cast iron / enamelled	
Thrust factor	3.4
Rotor wt. per stage (lbs.)	5
Bowl wt. 1st stage (lbs.)	53
Bowl wt. add'l. stage (lbs.)	17
Max. bowl horsepower	40
Impeller eye area (sq. in.)	6.3

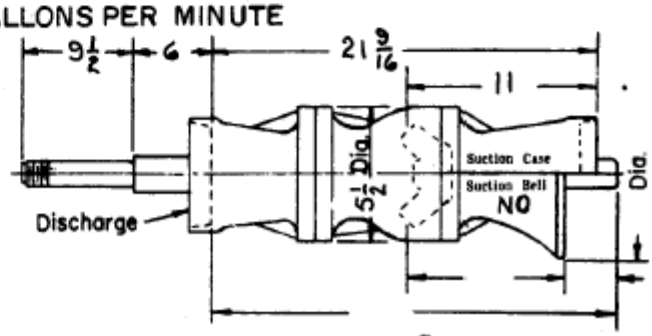

For additional stages add $4\frac{7}{8}$ per stage.

Impeller shaft diameter	1	Column pipe	4		
Minimum impeller shaft end play	.31	Suction pipe	4		