WORTHINGTON PUMP PERFORMANCE DATA

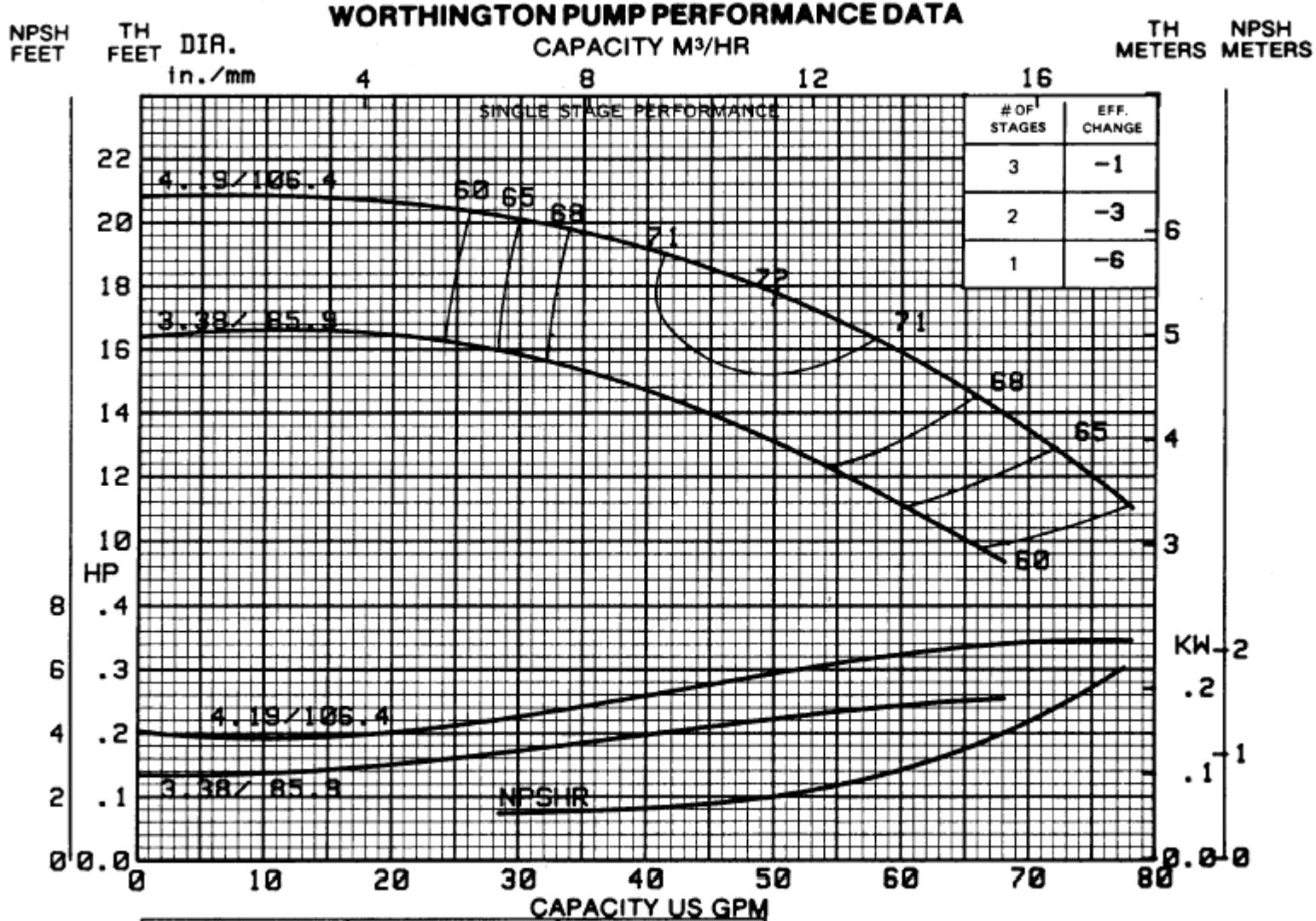

CURVE NO.	SIZE	RPM
A-24006	6L6	1760

Customer ____ Worthington S.O. ____
Project ____ Proposal/Order No. ____
Cust. Proposal/Order No. ____ Certified By ____
Customer Item No. ____ Date ____

Liquid/Service ____ Sp. Gr. ____ Visc. ____ SSU
Capacity ____ Head ____ Temp. ____ °F/°C

2400-8 Page 33
May 1986
6L6
1760 RPM

WORTHINGTON

RATING CURVES
(60 CYCLE)

6L-6
1760 RPM

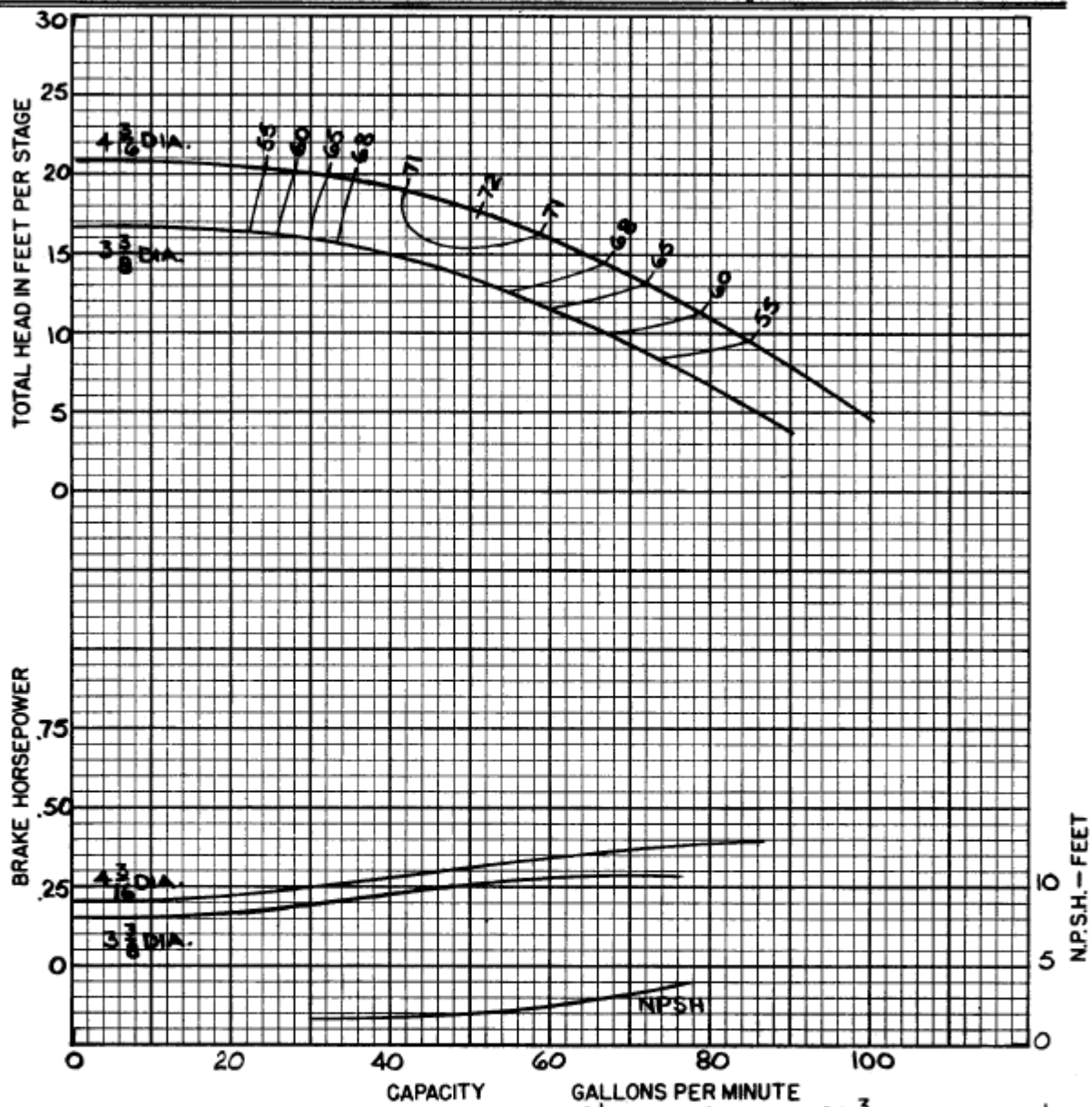

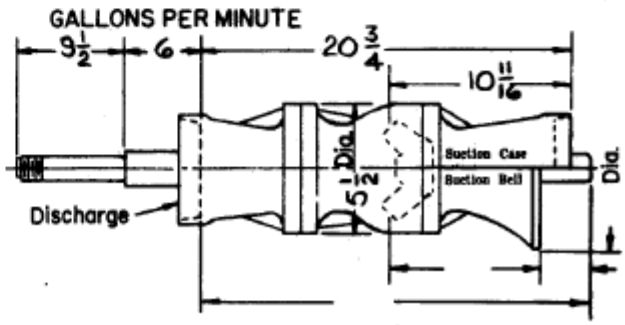

For additional stages add 4 per stage.

Efficiency shown is for 4 stages or more, with standard materials. For fewer stages or other materials change efficiency as shown.

No. of stages	Eff. change	MATERIAL	Eff. change
6	—	Impeller–bronze	—
5	—	Impeller–c.i.	-1
4	—	Impeller–c.i. enm.	+2
3	-1.5	Bowl–c.i. enm.	—
2	-3.5	Bowl–cast iron	-5
1	-6	Bowl–bronze	-4

Standard materials	
Impeller – bronze	
Bowl – cast iron / enamelled	
Thrust factor	1.75
Rotor wt. per stage (lbs.)	4
Bowl wt. 1st stage (lbs.)	47
Bowl wt. add'l. stage (lbs.)	16
Max. bowl horsepower	40
Impeller eye area (sq. in.)	2.6

Impeller shaft diameter	1	Column pipe	3
Minimum impeller shaft end play	.25	Suction pipe	3