WORTHINGTON PUMP PERFORMANCE DATA

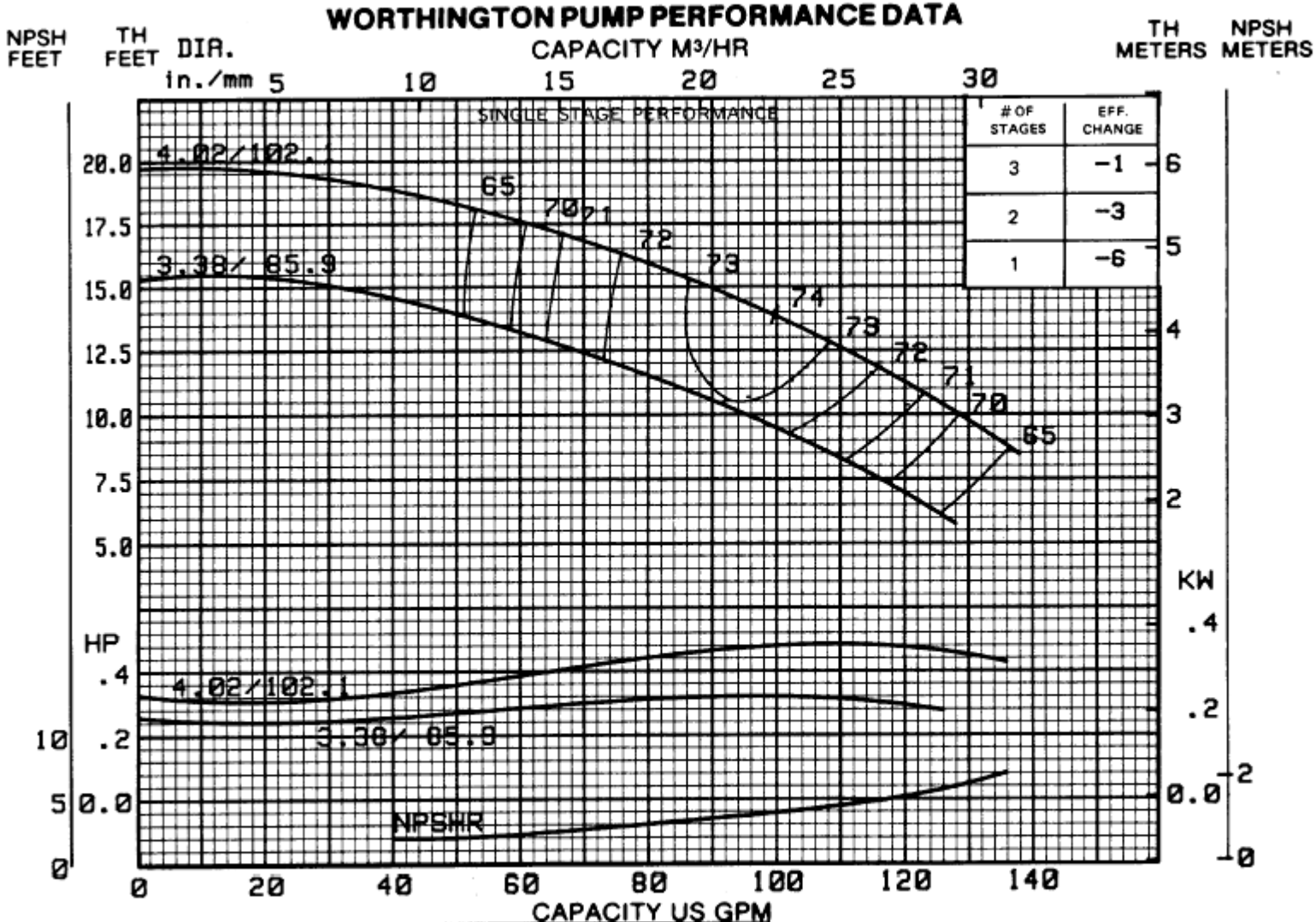

# OF STAGES	EFF. CHANGE
3	−1
2	−3
1	−6

CURVE NO.	SIZE	RPM
A-24056	6M11	1760

Customer ____ Worthington S.O. ____
Project ____ Proposal/Order No. ____
Cust. Proposal/Order No. ____ Certified By ____
Customer Item No. ____ Date ____

Liquid/Service ____ Sp. Gr. ____ Visc. ____ SSU
Capacity ____ Head ____ Temp. ____ °F/°C

RATING CURVES
(60 CYCLE)

6M-11
1760 RPM

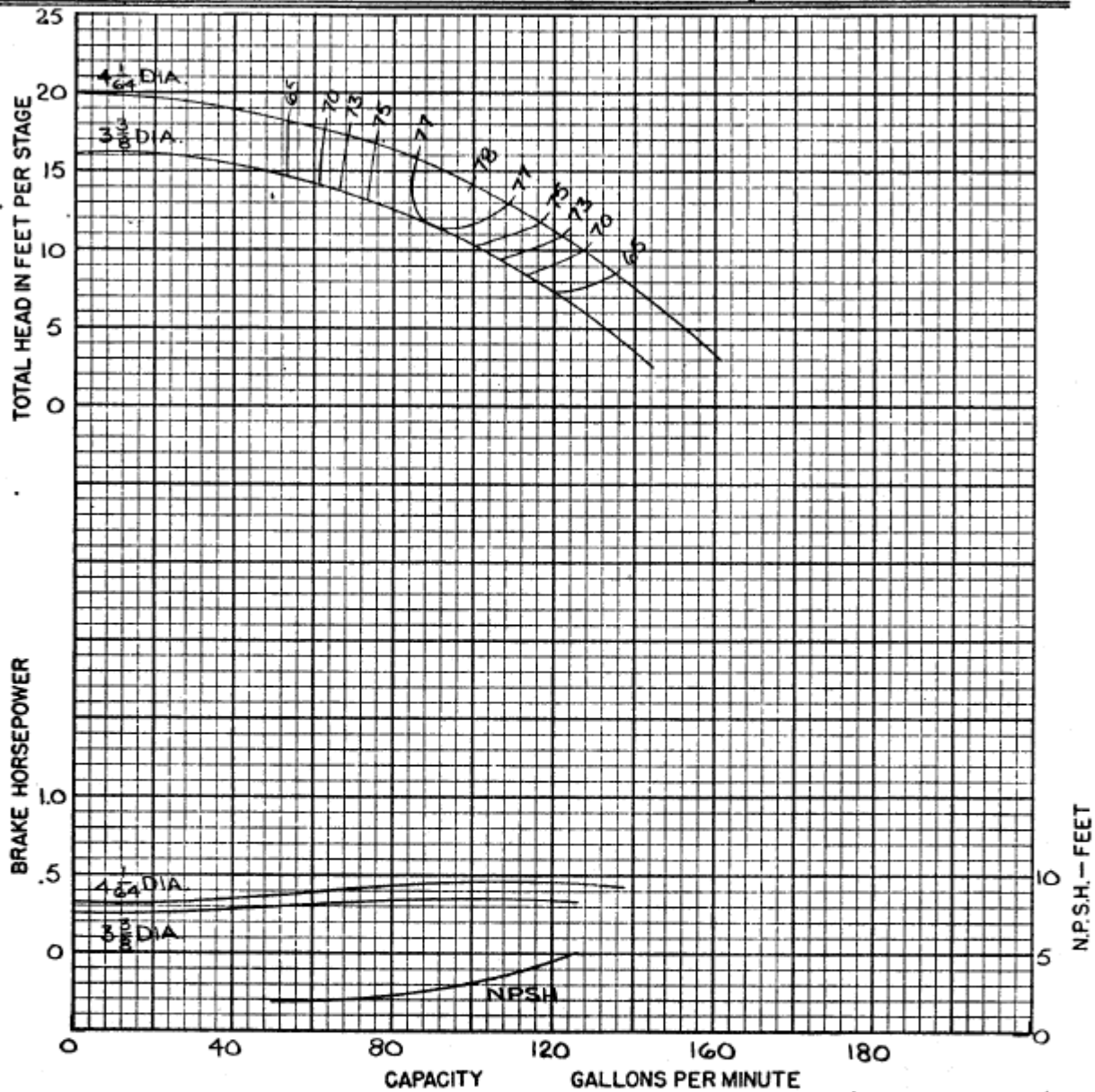

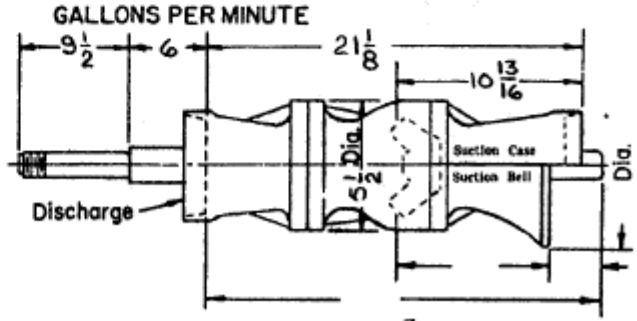

For additional stages add $4\frac{3}{8}$ per stage.

Efficiency shown is for 4 stages or more, with standard materials. For fewer stages or other materials change efficiency as shown.

No. of stages	Eff. change	MATERIAL	Eff. change	Standard materials	
				Impeller — bronze	
				Bowl — cast iron / enamelled	
6	—	Impeller-bronze	—	Thrust factor	2.5
5	—	Impeller-c.i.	-1	Rotor wt. per stage (lbs.)	4
4	—	Impeller-c.i. enm.	+2	Bowl wt. 1st stage (lbs.)	50
3	-1.5	Bowl-c.i. enm.	—	Bowl wt. add'l. stage (lbs.)	16
2	-3.5	Bowl-cast iron	-5	Max. bowl horsepower	40
1	-6	Bowl-bronze	-4	Impeller eye area (sq. in.)	4.1

Impeller shaft diameter	1	Column pipe	3.5	
Minimum impeller shaft end play	.37	Suction pipe	3.5	