WORTHINGTON PUMP PERFORMANCE DATA

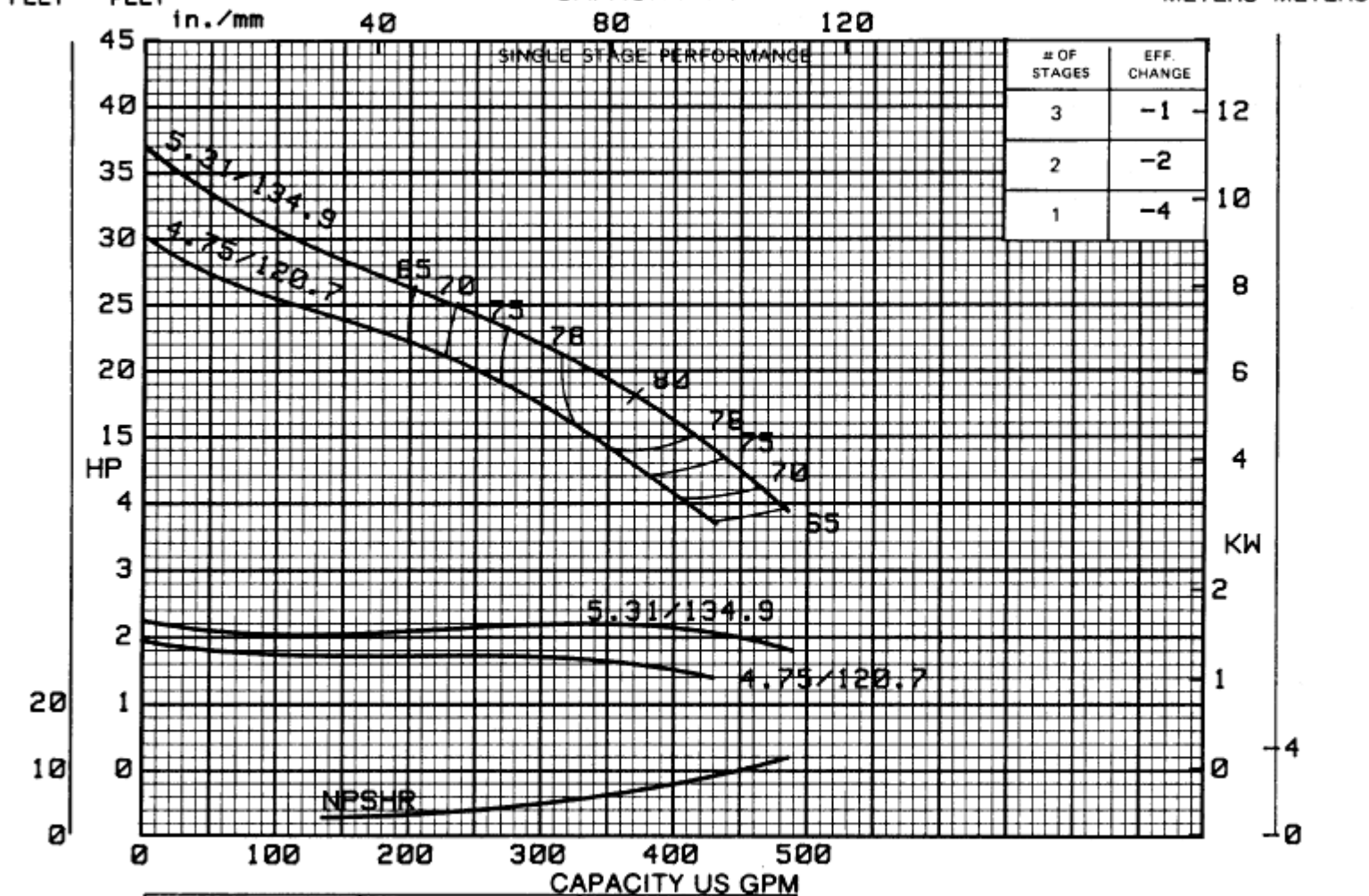

# OF STAGES	EFF. CHANGE
3	−1
2	−2
1	−4

CURVE NO.	SIZE	RPM
A-24110	8H38	1760

2400-8 Page 42
May 1986
8H38
1760 RPM

Customer ____ Worthington S.O. ____
Project ____ Proposal/Order No. ____
Cust. Proposal/Order No. ____ Certified By ____
Customer Item No. ____ Date ____

Liquid/Service ____ Sp. Gr. ____ Visc. ____ SSU
Capacity ____ Head ____ Temp. ____ °F/°C Consistency ____ %

(60 CYCLE)

8H-38
1760 RPM

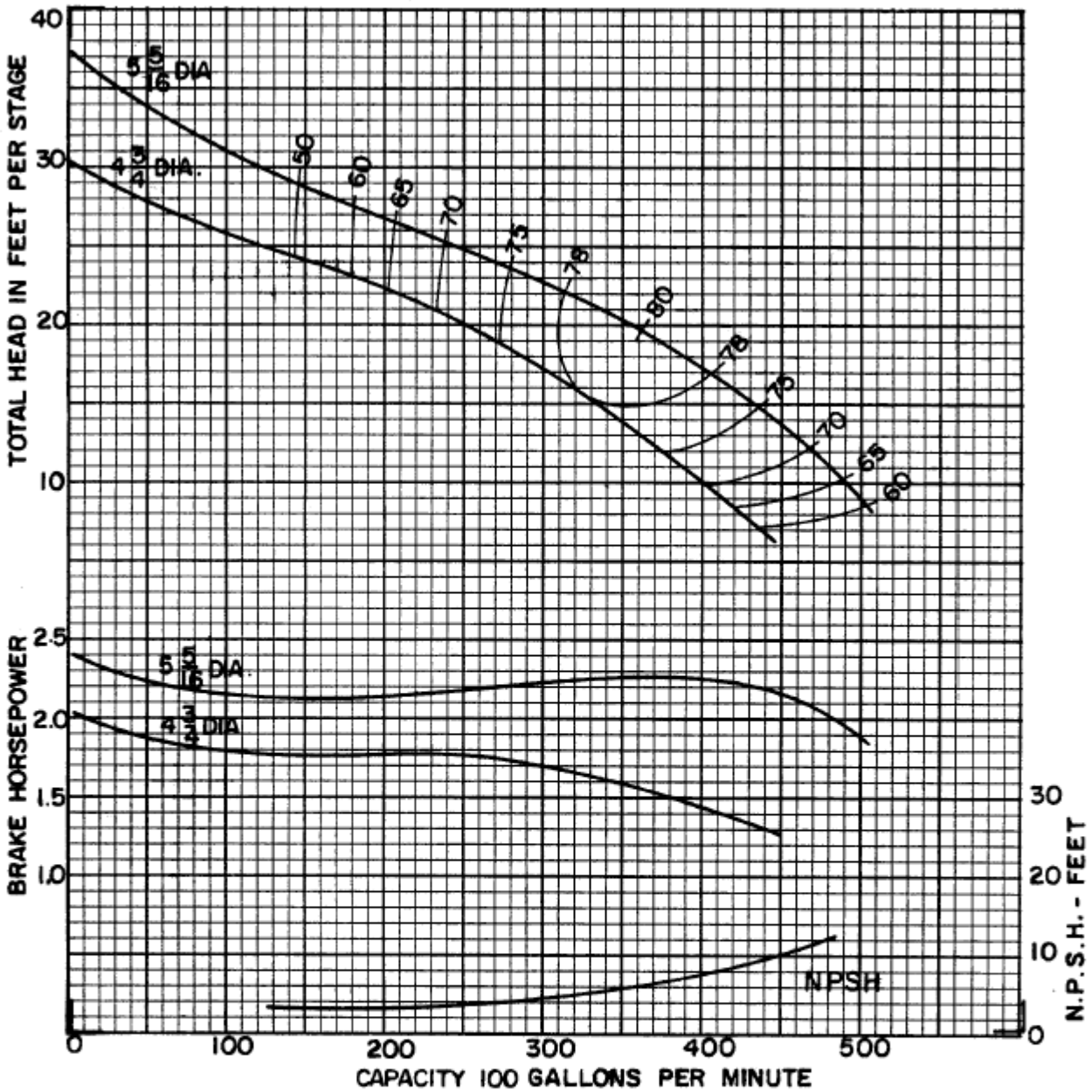

Efficiency shown is for 7 stages or more, with standard materials. For fewer stages or other materials change efficiency as shown.

No. of stages	Eff. change	MATERIAL	Eff. change
6	-1.0	Impeller-bronze	—
5	-1.5	Impeller-c.i.	-1
4	-2.0	Impeller-c.i. enm.	+2
3	-2.5	Bowl-c.i. enm.	—
2	-3.0	Bowl-cast iron	-3.5
1	-4.0	Bowl-bronze	-3

Standard materials	
Impeller — bronze	
Bowl — cast iron / enamelled	
Thrust factor	6.1
Rotor wt. per stage (lbs.)	7
Bowl wt. 1st stage (lbs.)	117
Bowl wt. add'l. stage (lbs.)	35
Max. bowl horsepower	80
Impeller eye area (sq. in.)	12.2

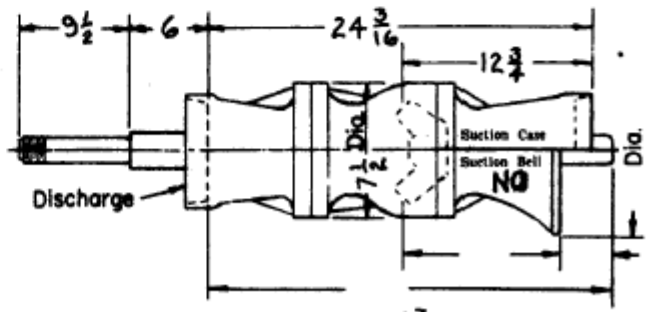

For additional stages add 6 3/4 per stage.

Impeller shaft diameter	1.25	Column pipe	6		
Minimum impeller shaft end play	.375	Suction pipe	6		