WORTHINGTON PUMP PERFORMANCE DATA

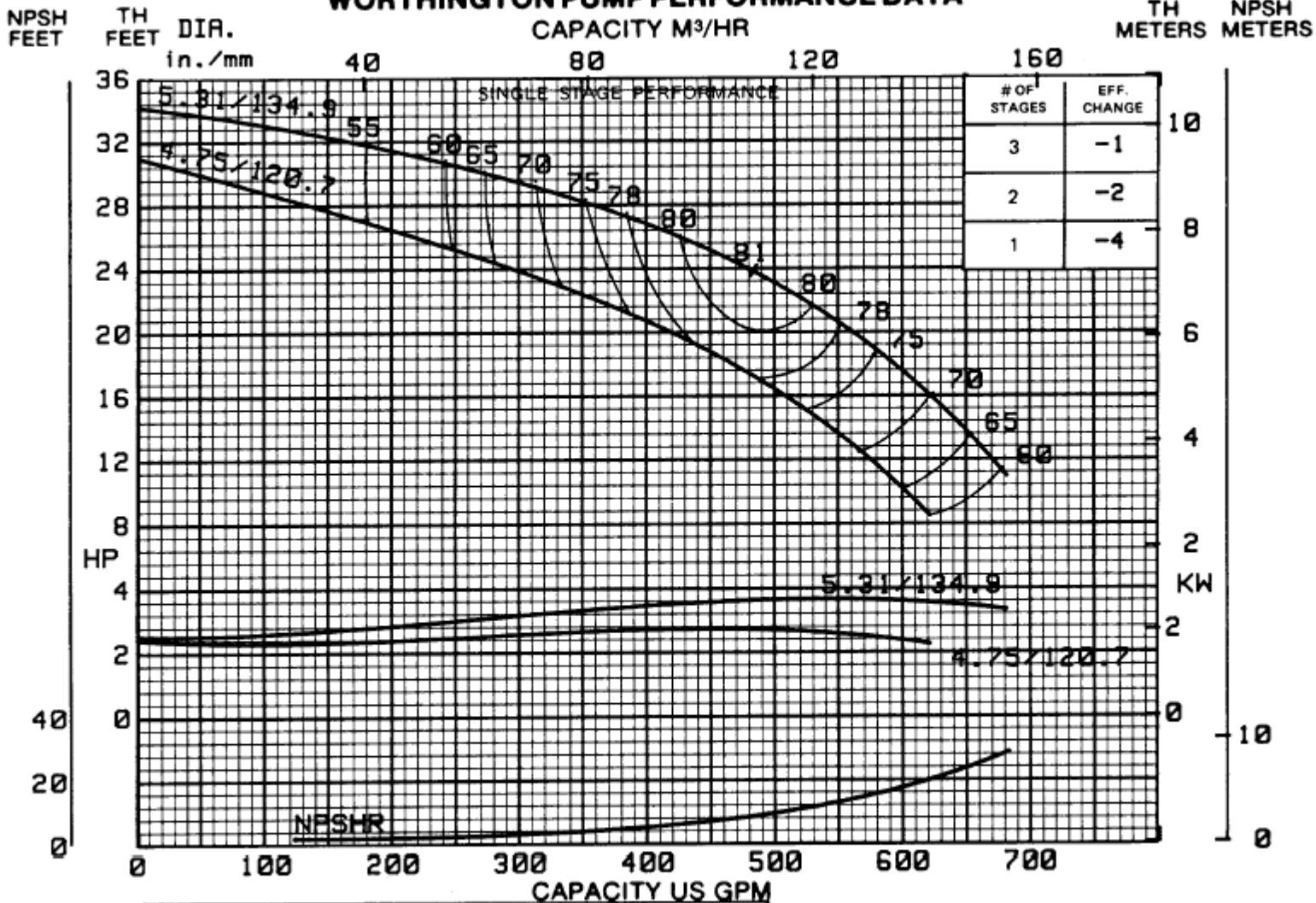

# OF STAGES	EFF. CHANGE
3	-1
2	-2
1	-4

CURVE NO.	SIZE	RPM
A-24115	8H48	1760

Customer _____ Worthington S.O. _____
Project _____ Proposal/Order No. _____
Cust. Proposal/Order No. _____ Certified By _____
Customer Item No. _____ Date _____

Liquid/Service _____ Sp. Gr. _____
Capacity _____ Head _____ Temp. _____ °F/°C Visc. _____ SSU

2400-8 Page 43
May 1986
8H48
1760 RPM

WORTHINGTON

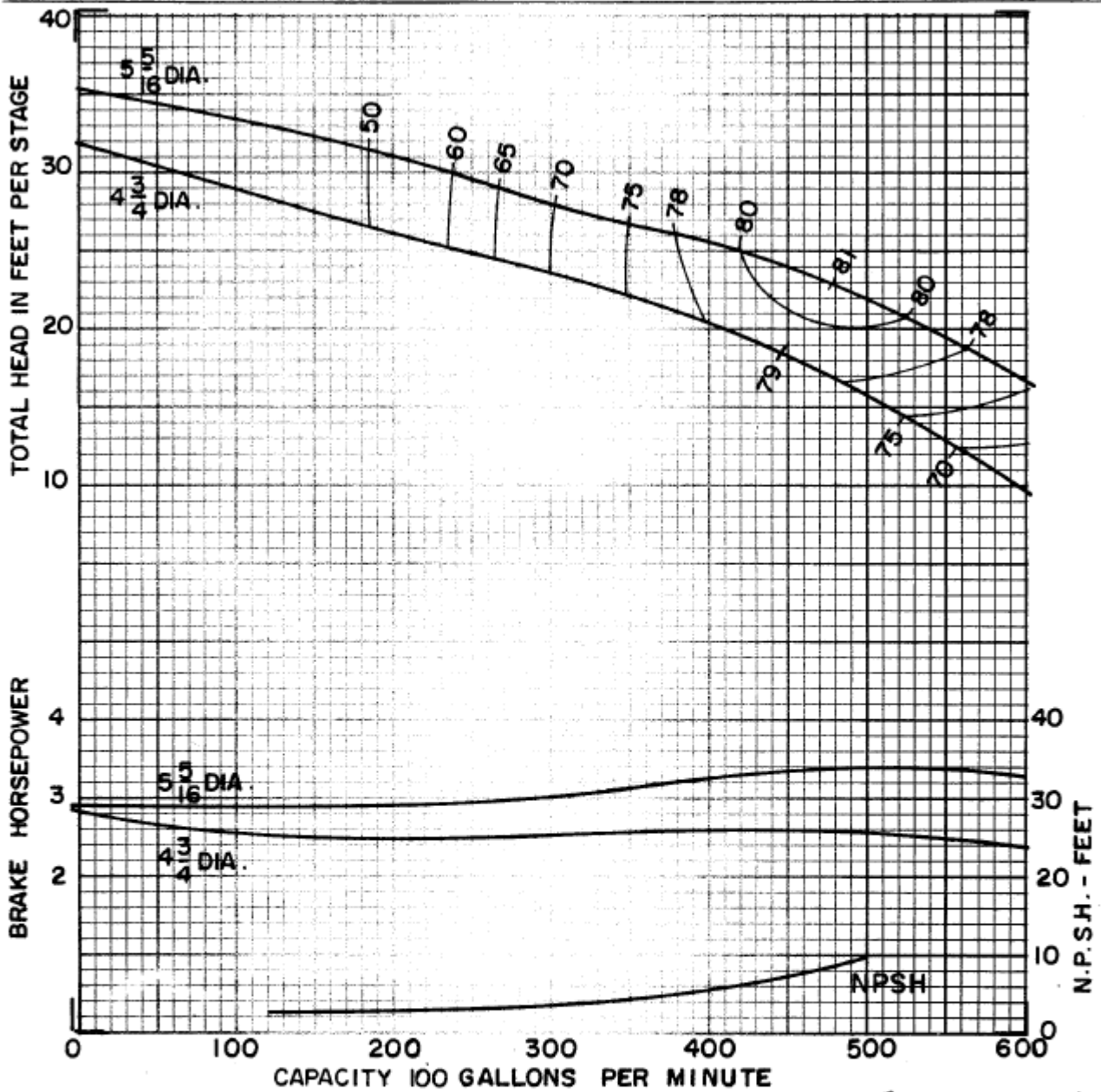

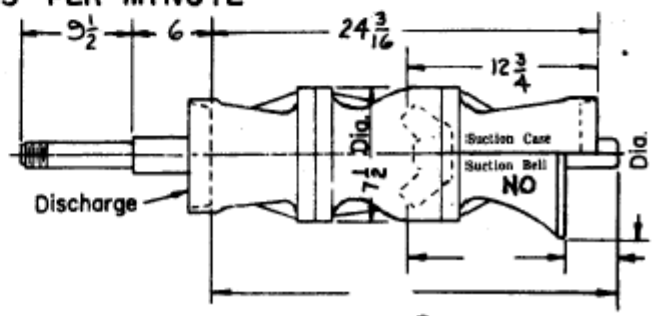

For additional stages add $6\frac{3}{4}$ per stage.

Efficiency shown is for 7 stages or more, with standard materials. For fewer stages or other materials change efficiency as shown.

No. of stages	Eff. change	MATERIAL	Eff. change
6	-1.0	Impeller-bronze	—
5	-1.5	Impeller-c.i.	-1
4	-2.0	Impeller-c.i. enm.	+2
3	-2.5	Bowl-c.i. enm.	—
2	-3.0	Bowl-cast iron	-3.5
1	-4.0	Bowl-bronze	-3

Standard materials	
Impeller — bronze	
Bowl — cast iron / enamelled	
Thrust factor	6.1
Rotor wt. per stage (lbs.)	7
Bowl wt. 1st stage (lbs.)	117
Bowl wt. add'l. stage (lbs.)	35
Max. bowl horsepower	80
Impeller eye area (sq. in.)	12.2

Impeller shaft diameter	1.25	Column pipe	6
Minimum impeller shaft end play	.375	Suction pipe	6