WORTHINGTON PUMP PERFORMANCE DATA

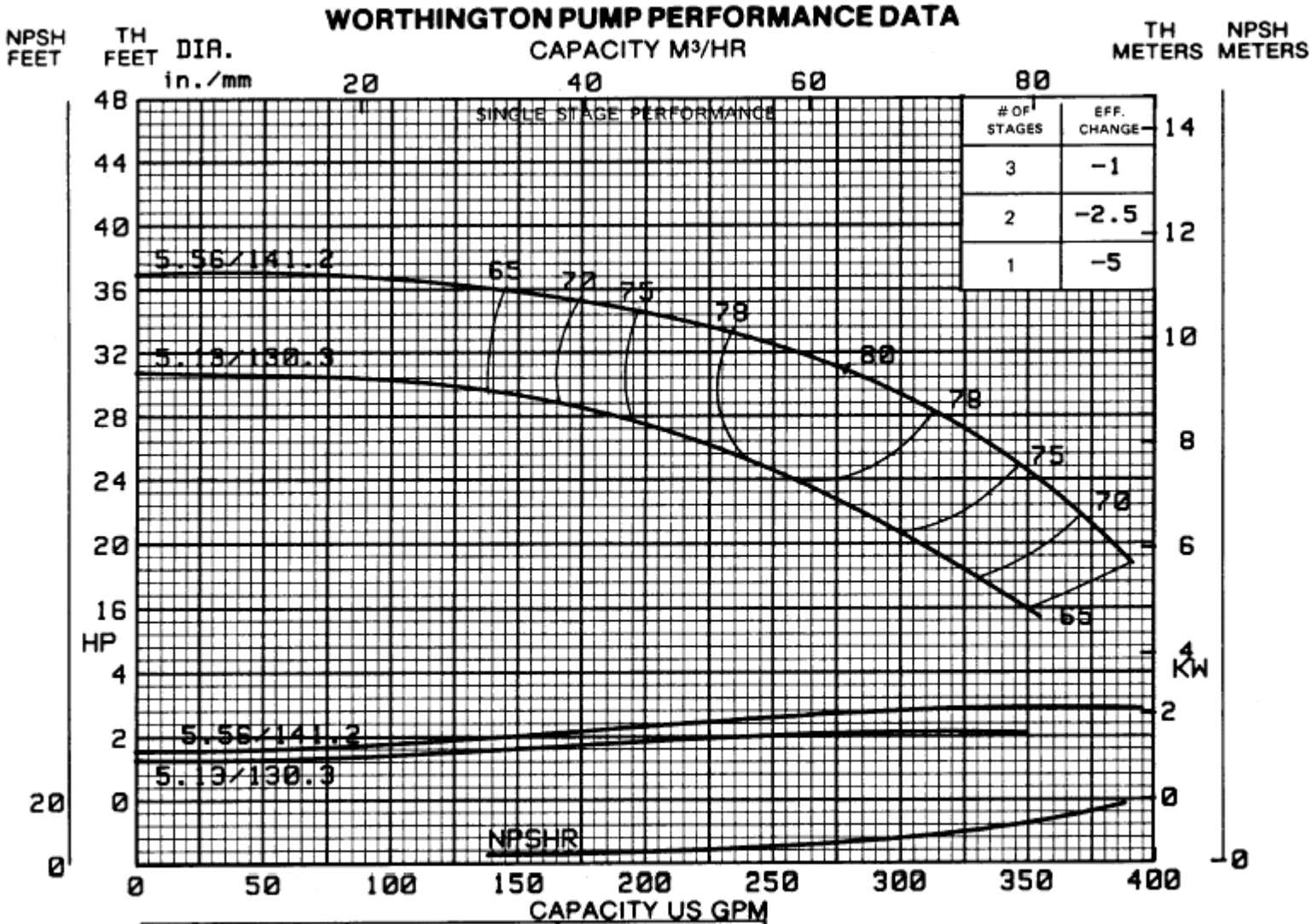

CURVE NO.	SIZE	RPM
A-24068	8M28	1760

Customer _____ Worthington S.O. _____
Project _____ Proposal/Order No. _____
Cust. Proposal/Order No. _____ Certified By _____
Customer Item No. _____ Date _____

Liquid/Service _____ Sp. Gr. _____
Capacity _____ Head _____ Temp. _____ °F/°C Visc. _____ SSU

2400-8 Page 41
May 1986
8M28
1760 RPM

WORTHINGTON

RATING CURVES
(60 CYCLE)

8M-28
1760 RPM

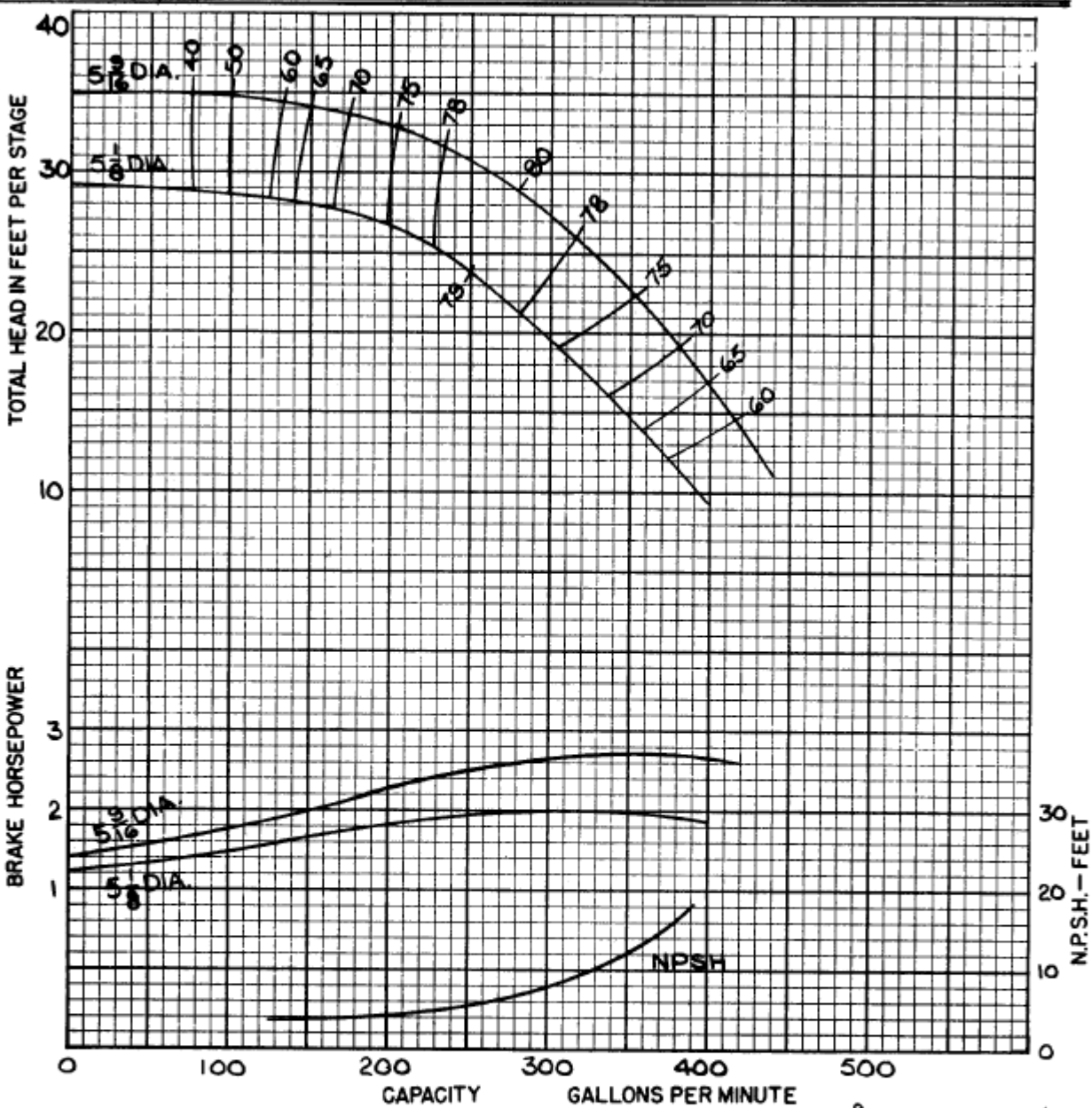

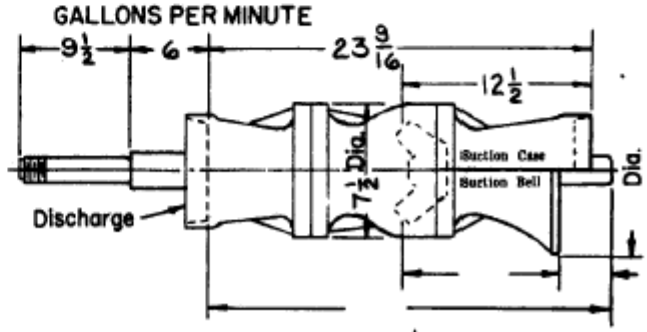

For additional stages add $6\frac{1}{8}$ per stage.

Efficiency shown is for 6 stages or more, with standard materials. For fewer stages or other materials change efficiency as shown.

No. of stages	Eff. change	MATERIAL	Eff. change
6	—	Impeller–bronze	—
5	-.5	Impeller–c.i.	-1
4	-1	Impeller–c.i. enm.	+2
3	-1.5	Bowl–c.i. enm.	—
2	-2.5	Bowl–cast iron	-3.6
1	-4	Bowl–bronze	-3

Standard materials	
Impeller — bronze	
Bowl — cast iron / enamelled	
Thrust factor	4.3
Rotor wt. per stage (lbs.)	7
Bowl wt. 1st stage (lbs.)	85
Bowl wt. add'l. stage (lbs.)	30
Max. bowl horsepower	80
Impeller eye area (sq. in.)	7.7

Impeller shaft diameter	1.25	Column pipe	5
Minimum impeller shaft end play	.438	Suction pipe	5