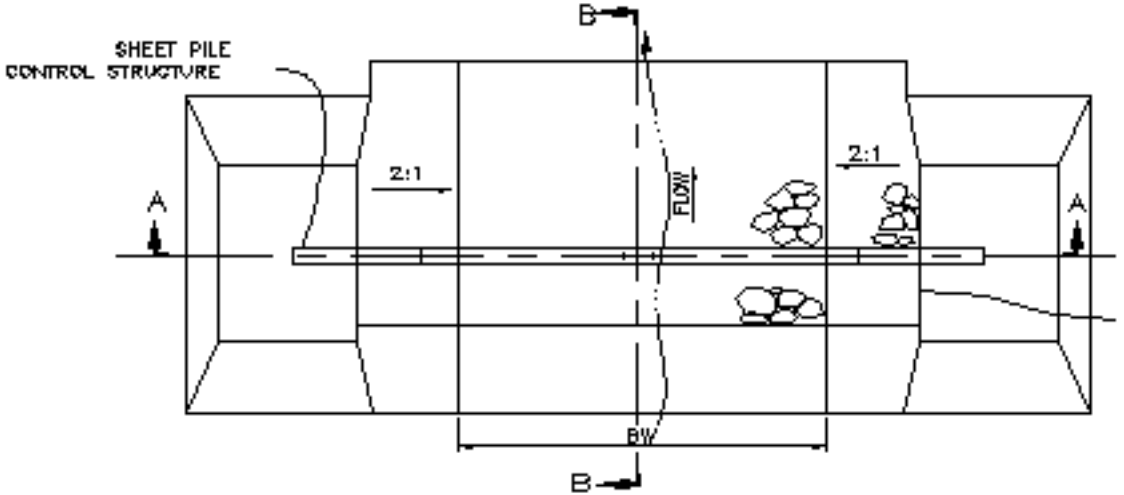
SHEET PILE
CONTROL STRUCTURE
B
A
2:1
2:1
FLOW
A
BW
B

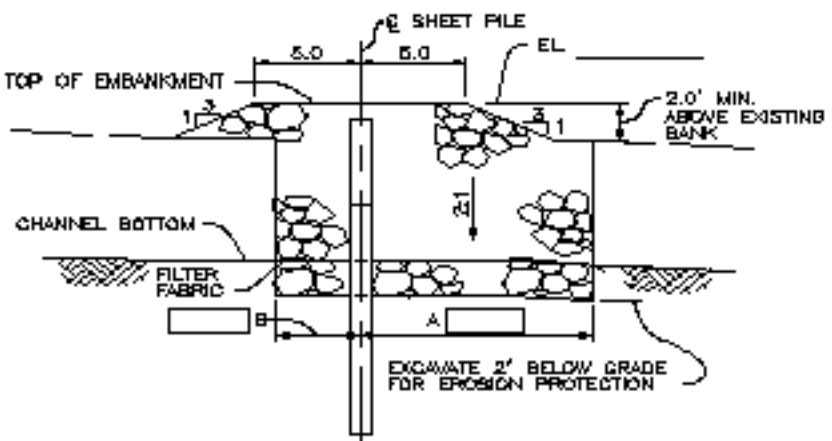
℄ SHEET PILE
5.0
5.0
EL
TOP OF EMBANKMENT
3
1
3
1
2.0' MIN.
ABOVE EXISTING
BANK
2:1
CHANNEL BOTTOM
FILTER
FABRIC
B
A
EXCAVATE 2' BELOW GRADE
FOR EROSION PROTECTION

SECTION B–B