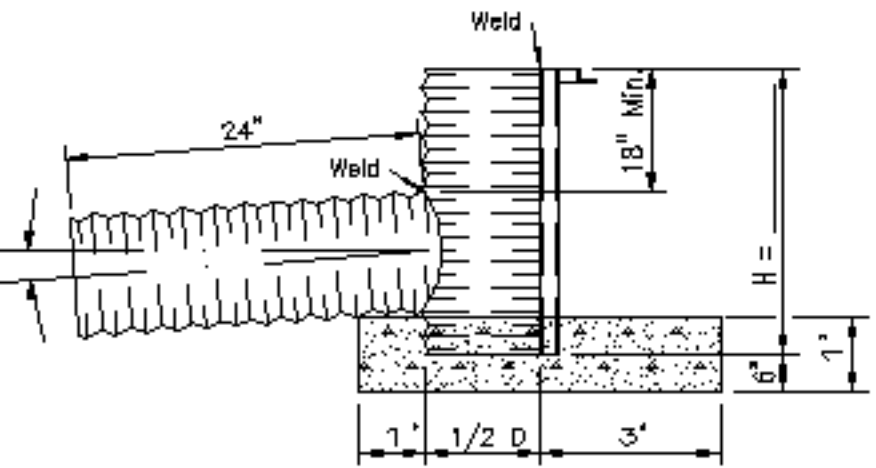

ELEVATION

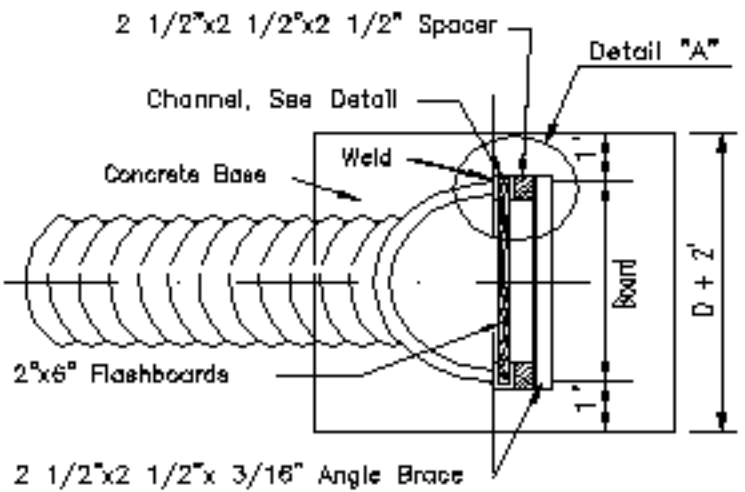

PLAN