# DETAIL 8 – PIPE OUTLET SEDIMENT TRAP – ST I

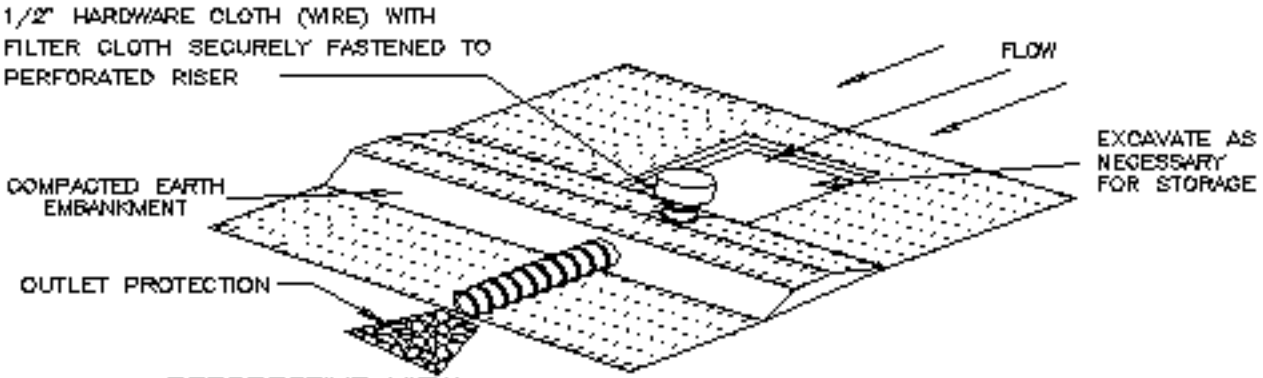


PERSPECTIVE VIEW

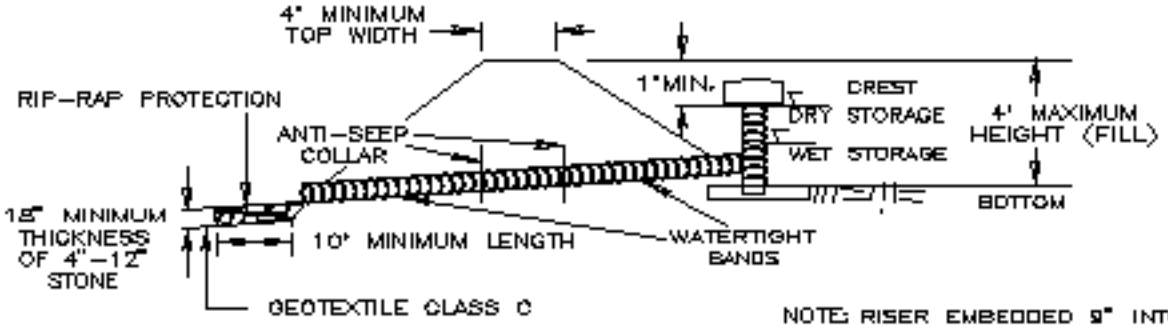


EMBANKMENT SECTION THROUGH RISER

NOTE: RISER EMBEDDED 9" INTO CONCRETE OR 1/4" STEEL PLATE ATTACHED TO RISER WITH A CONTINUOUS WELD ON BOTTOM AND 2' OF STONE PLACED ON STEEL PLATE TWICE THE RISER DIAMETER (MIN.)

Construction Specifications