DETAIL 23C - CURB INLET PROTECTION (COG OR COS INLETS)

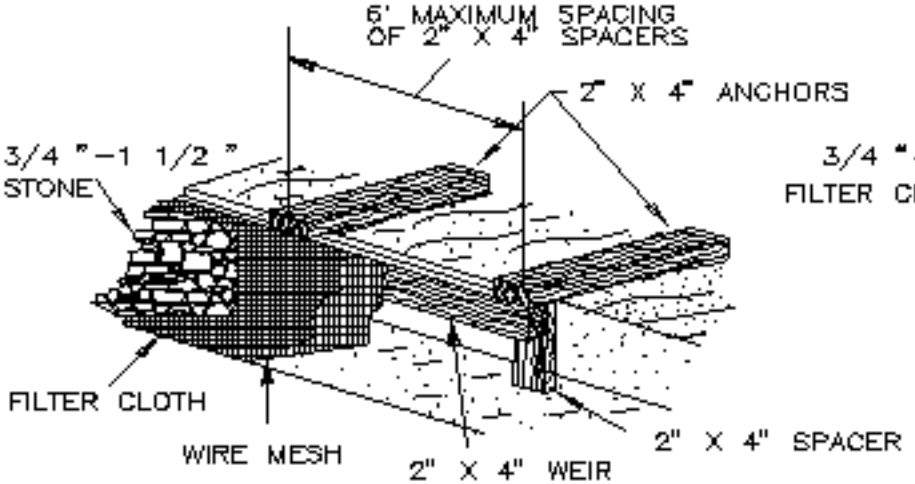

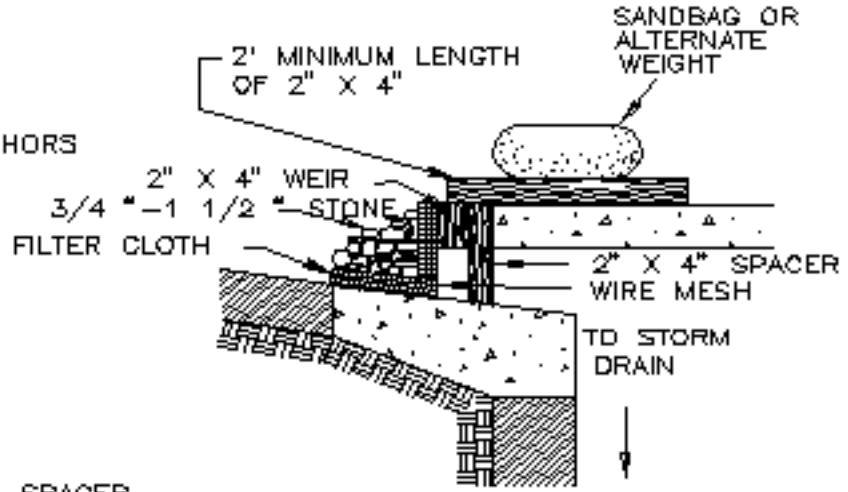
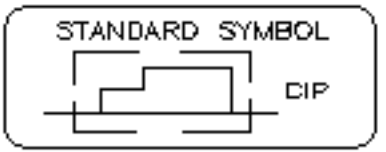
MAX. DRAINAGE AREA = 1/4 ACRE