DETAIL 25 - ROCK OUTLET PROTECTION I

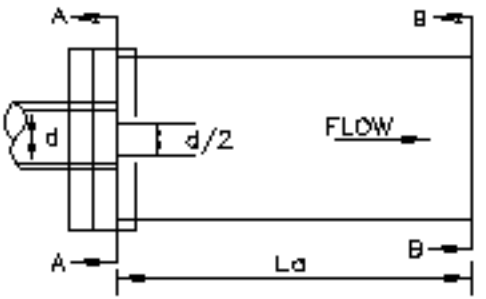

PLAN VIEW

DISCHARGE TO SEMI CONFINED SECTION (MAXIMUM TAILWATER CONDITION)

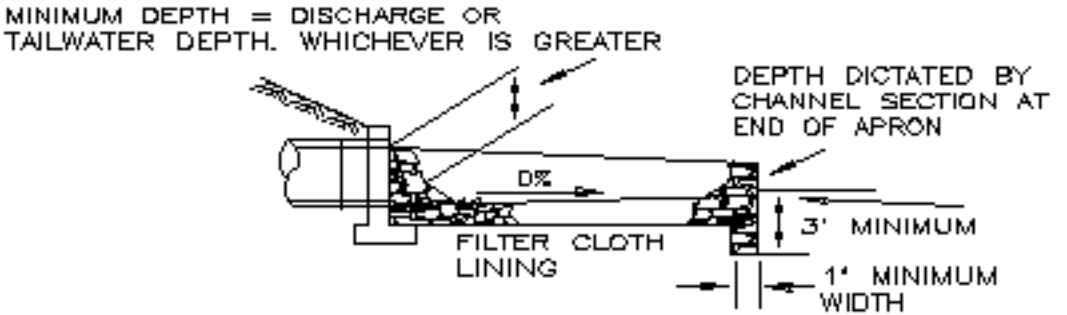

ELEVATION