WILDERNESS REGISTRATION BOX

LDRB 6001

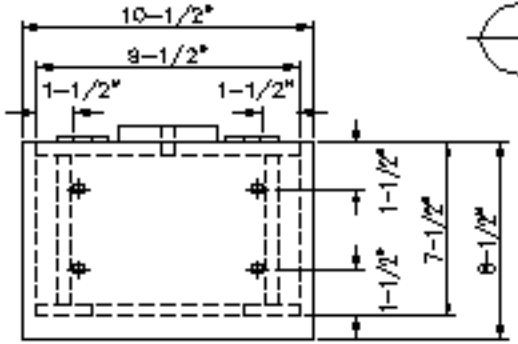

PLAN

REGISTER BOX TO BE MADE WITH 3/4" MARINE PLYWOOD EXCEPT FOR FRONT AND BACK WHICH ARE 1/2" MARINE PLYWOOD

FOREST SERVICE WILL PROVIDE OPERATING INSTRUCTIONS, CHAIN & PENCIL

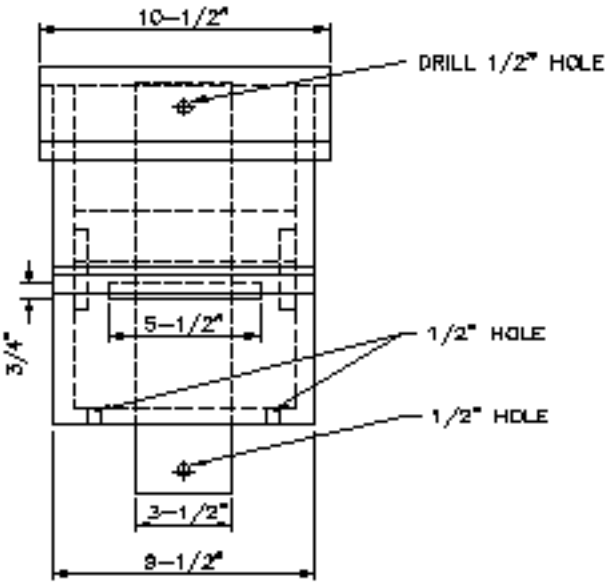

ELEVATION

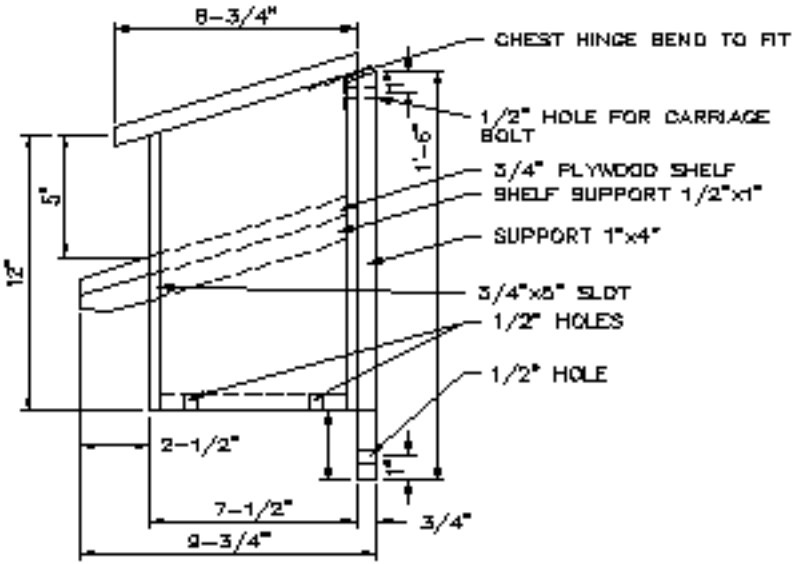

SIDE ELEVATION