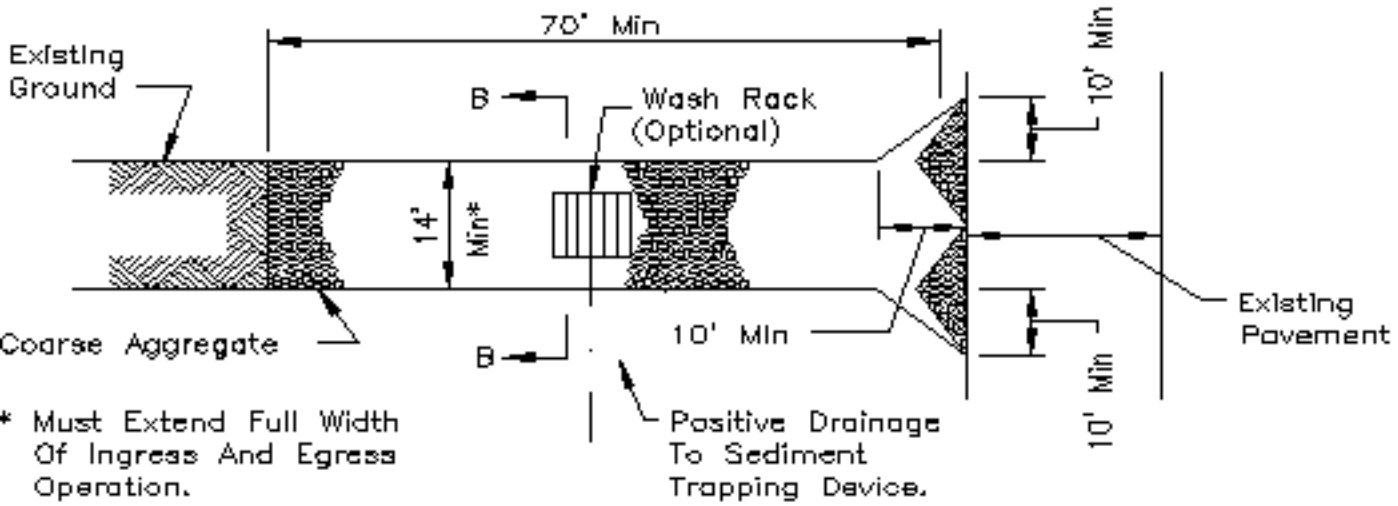


PLAN VIEW

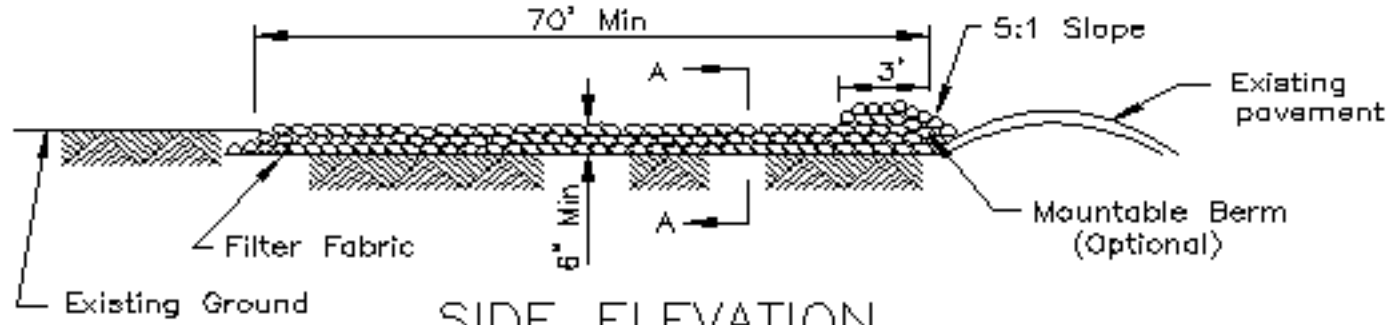


SIDE ELEVATION