DETAIL 24 - STABILIZED CONSTRUCTION ENTRANCE

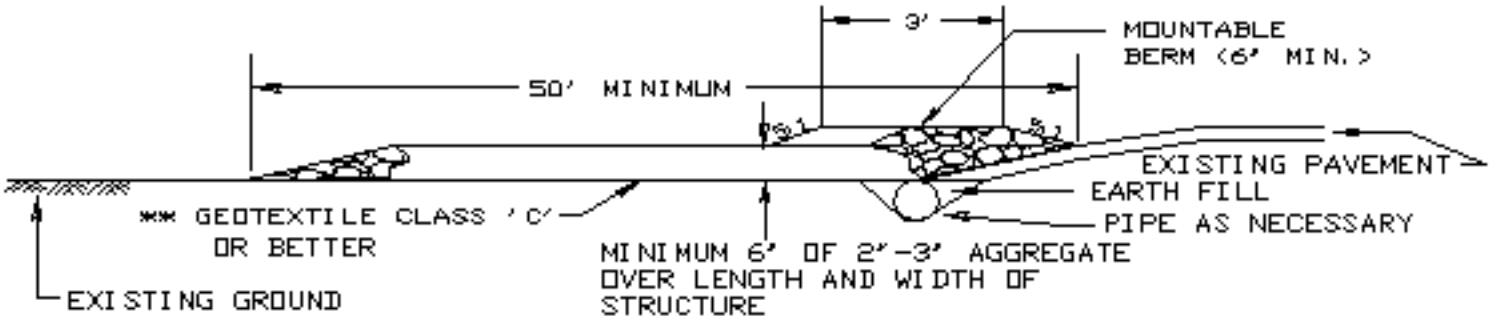

PROFILE

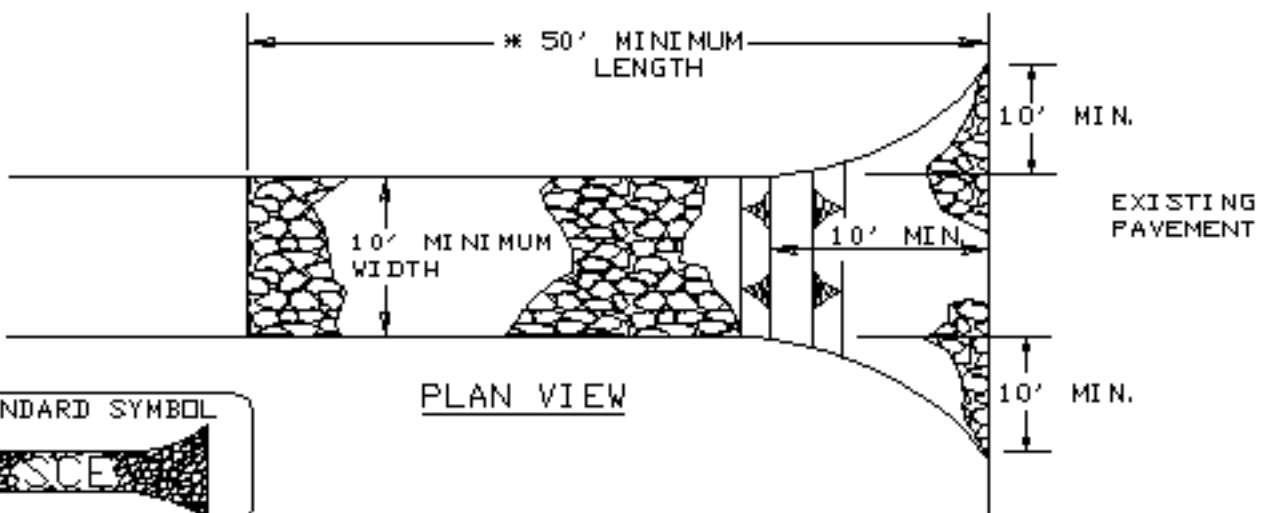

PLAN VIEW

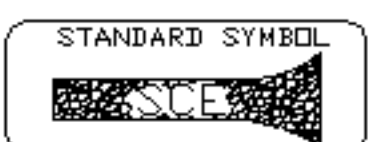

Construction Specification